FINAL

Stream Gage Maintenance Project
Mitigated Negative Declaration

Prepared by

California Department of Water Resources
San Joaquin District
Environmental Services Section

September, 2002

Table of Contents

PROJECT DISCUSSION 3
BACKGROUND 3
PURPOSE AND NEED 4
ENVIRONMENTAL SETTING 5
PROPOSED MAINTENANCE ACTIVITIES 6
DEFINITION OF TERMS 6
DESCRIPTION OF ACTIVITIES 11
SITE DESCRIPTIONS 15
STANISLAUS COUNTY 15
MERCED COUNTY 29
MADERA COUNTY 45
ENVIRONMENTAL CHECKLIST 47
ENVIRONMENTAL CHECKLIST DISCUSSION 54
AVOIDANCE AND MITIGATION MEASURES 58
GEOLOGIC PROBLEMS: 58
WATER: 58
TRANSPORTATION/CIRCULATION: 58
BIOLOGICAL RESOURCES: 59
HAZARDS: 69
PUBLIC SERVICES: 70
APPENDIX A: SPECIAL STATUS PLANTS AND ANIMALS 71
APPENDIX B: CONTACT LIST 73
APPENDIX C: PERMITS REQUIRED 74
APPENDIX D: LITERATURE CITED 75

List of Figures

FIGURE 1. PROJECT AREA. 3
FIGURE 2. TYPICAL CABLEWAY 6
FIGURE 3. TYPICAL A-FRAME DETAIL. 7
FIGURE 4. CABLEWAY ANCHORS. 8
FIGURE 5. TYPICAL STREAM GAGE DETAIL. 9
FIGURE 6. TYPICAL STAFF GAGE. 10
FIGURE 7. CAN FLUSHING DETAIL. 13

PROJECT DISCUSSION

BACKGROUND

The California Department of Water Resources (DWR) has maintained stream gages for over 75 years. In the early 1920's, the Department began this work as the California State Department of Public Works.

Currently, DWR maintains 16 stream gages in the San Joaquin River Drainage, situated in three counties, and spread over more than 200 miles of watercourse (Figure 1). Seven of the stations are located in Stanislaus County, eight are in Merced County, and one is located in Madera County. The two closest sites on the same body of water are found on the Eastside Bypass, in Merced County, and are approximately 6.4 miles apart. The average distance between any two sites on a contiguous watercourse is 18 miles.

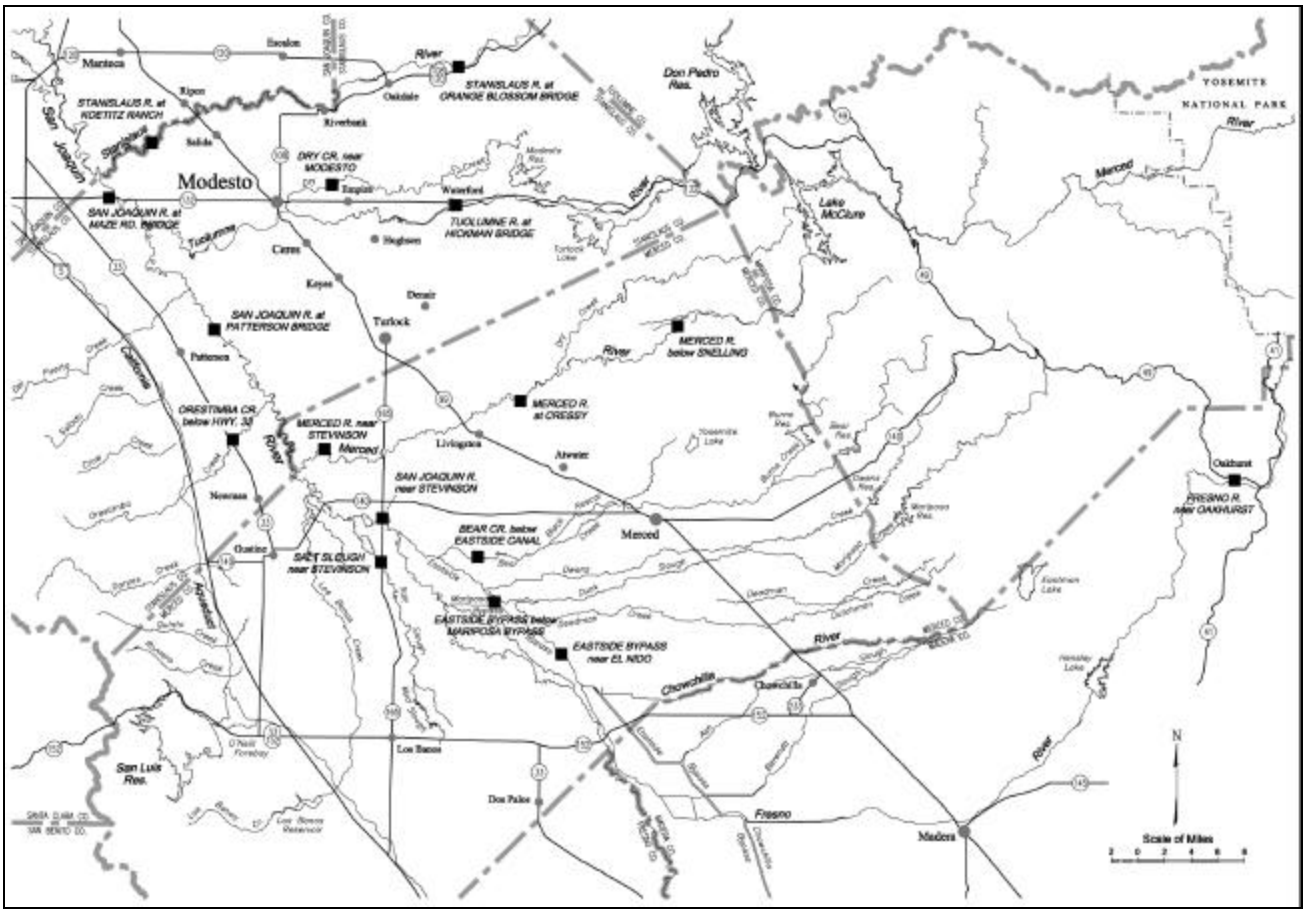

Figure 1. Project Area.

A stream gaging station refers to a site dedicated to the collection of stream flow data. Data collected includes river width, depth, velocity and water quality. A station consists of a can, house, intake, walkway, data collection equipment and, in some cases, an associated cableway.

A stream gage typically functions as a stillwell that measures the water level in a stream. In its simplest form, a stillwell is usually constructed from an upright culvert pipe that connects to a stream via intake lines. The well is designed to measure the water level, or stage, without perturbation from flow and debris in the channel. In some cases, the traditional stillwell apparatus is being replaced by small pressure transducer/bubbler gage devices to measure water levels. A pressure transducer/bubbler is less obtrusive and requires a much smaller housing structure, but it is often installed in conjunction with and within an existing stillwell. Flow, or discharge, in the channel is measured from a nearby bridge, cableway, or boat, and is correlated with the water level in the well at the time of measurement, yielding a stage-discharge relationship. Since the flow for each site changes as the river geomorphology changes, flow measurements and the corresponding stage (water level) are measured on a regular basis so that constant in-channel flow can be determined from water level readings alone.

PURPOSE AND NEED

The California Department of Water Resources provides a service to State, federal, and local agencies and private entities by monitoring water flow and quality in rivers, streams and sloughs within the San Joaquin Valley, and by maintaining the gaging stations. Stream gage data is posted on the World Wide Web through the California Data Exchange Center, where it is accessible to the general public. Public and private entities rely on this data for a variety of applications including, but not limited to:

- Flood forecast and management
- Floodplain delineation and management
- Biological management, restoration, and monitoring
- Water quality characterization and determination of pollutant discharge rates
- Determination of waste discharge permit requirements
- Evaluation of surface and groundwater interactions
- Hydrologic cycle research
- Land use planning
- Recreation facilities development
- Design and operation of multipurpose reservoirs and power production scheduling
- Highway bridge and culvert design
- Municipal, industrial, and agricultural water allocation

In order to keep these stations functioning properly, routine maintenance activities need to be performed in an efficient and timely manner. Failure to provide consistent, timely, and accurate data could result in significant negative impacts such as the loss of life and/or property, inefficient operation of diversion structures and other facilities, harm to sensitive aquatic and riparian species, and data gaps in hydrologic and biological monitoring programs. Inability to maintain consistent data severely impairs planning and long-term analyses as data lost can never be recovered. Deteriorating stations may also pose a public risk.

The purpose of this project is to identify stream gage maintenance needs and to obtain permits for a five-year maintenance plan incorporating avoidance and mitigation measures when necessary.

Any future work not described in this document will be discussed with the appropriate regulatory agencies, and permits will be obtained as necessary.

ENVIRONMENTAL SETTING

Stream gages exist on the San Joaquin River, three of its major tributaries and lesser rivers, streams and sloughs. All are within the San Joaquin Basin system, and are within riparian habitat corridors that have been subject to varying levels of disturbance.

The stream gages range in elevation from 20 to 2,500 feet above sea level with average annual rainfall at 10 inches in the lower basin elevations to 31 inches at higher elevations. Flows in the system vary widely but, on average, reach a maximum of 16,500 cfs, during flood events and can exceed 50,000 cfs. In-channel project work typically will be scheduled when flows range from 10 to 1,000 cfs. Flows at all major tributary sites are affected by upstream diversions and water retention structures.

The project has the potential to affect several sensitive terrestrial and aquatic species. Natural plant communities found in the project area most closely resemble Great Valley Mixed Riparian Forest, Great Valley Valley Oak Riparian Forest, Great Valley Cottonwood Riparian Forest, and White Alder Riparian Forest as characterized by Holland (1986). Other vegetation types include Willow Riparian, herbaceous with scattered willows, and herbaceous with emergent marsh.

PROPOSED MAINTENANCE ACTIVITIES

DEFINITION OF TERMS

Figures two through seven illustrate a typical stream gage station, the terms defined below, and maintenance activities.

Cableway
A structure, consisting of two A-frame supports with anchors, one cable stretching across the stream channel, and one cable car. The cableway allows DWR staff to safely collect flow data. (Figures 2, 3, and 4).

Can
A metal cylindrical structure, usually a culvert pipe, attached to an intake and containing a cable and float. The can holds a column of water that is the same depth as the stream, forming what is referred to as a stillwell. (Figure 5).

House
A portion of the stream gage, usually a culvert pipe with a roof, but may be a wooden box, which is attached to the top of the can and contains the stream flow data collection equipment. (Figure 5).

Intake line
A pipe that connects the can to the stream channel allowing water to enter the can. Three are usually installed for each gage and are constructed of 2 to 3 inch diameter PVC or metal pipe. (Figure 5).

Staff gage
An upright board possessing calibration marks, usually 3 to 4 feet high, installed in the ground outside of the gage or on the gage, used to visually verify the water level outside the can. (Figure 6).

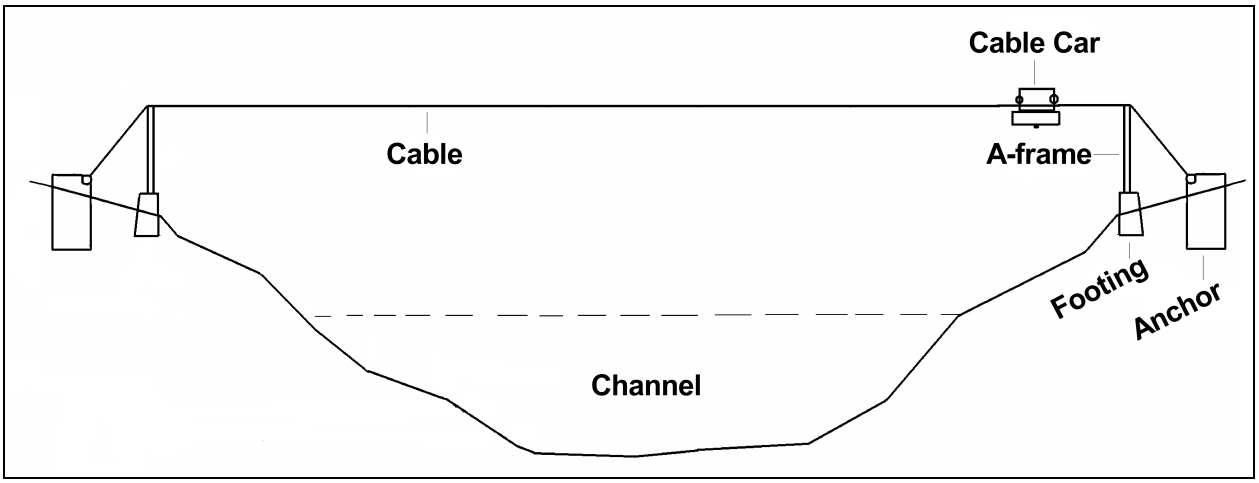

Figure 2. Typical cableway

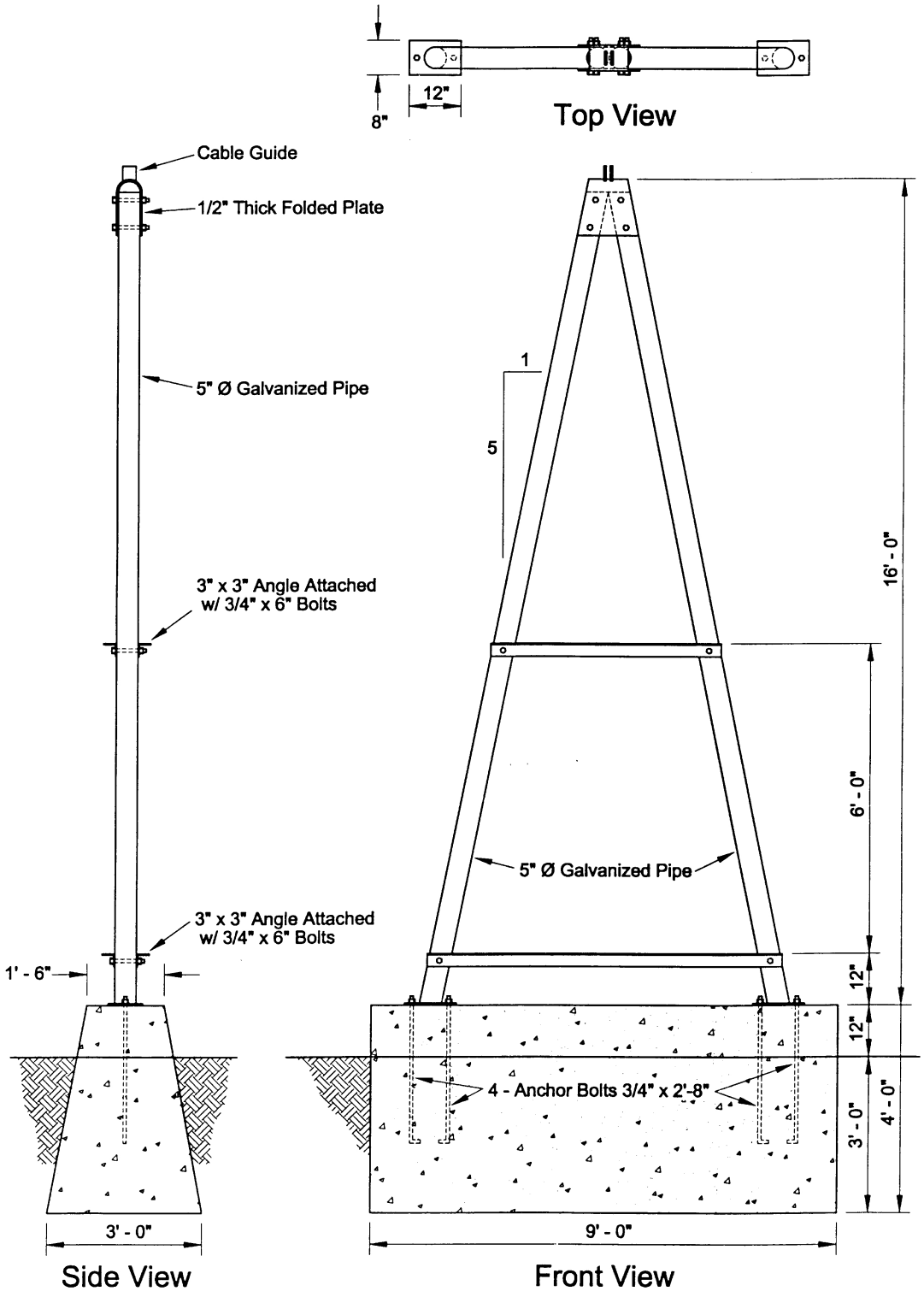

Figure 3. Typical A-frame detail.

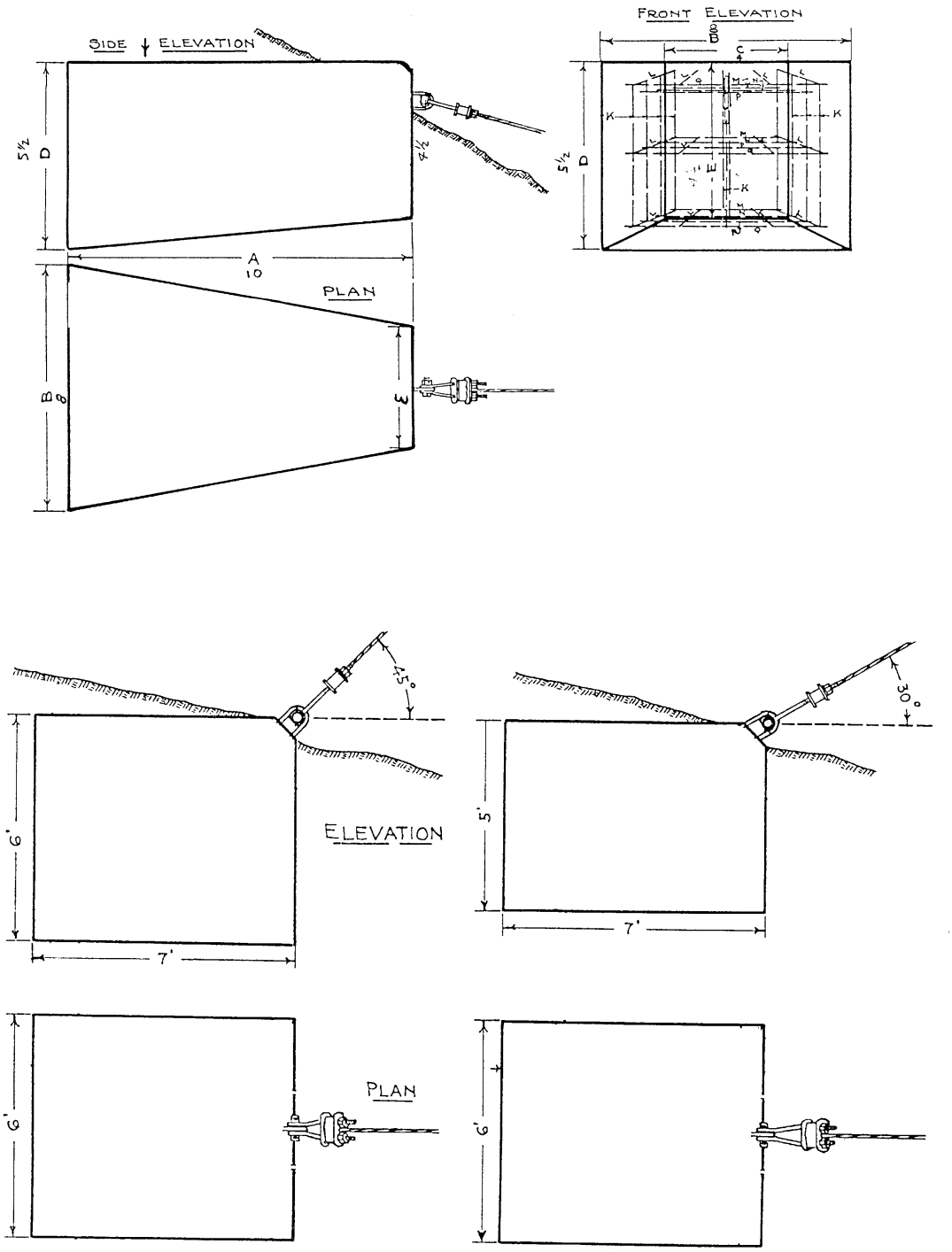

Figure 4. Cableway anchors. Type used will depend upon bank slope.

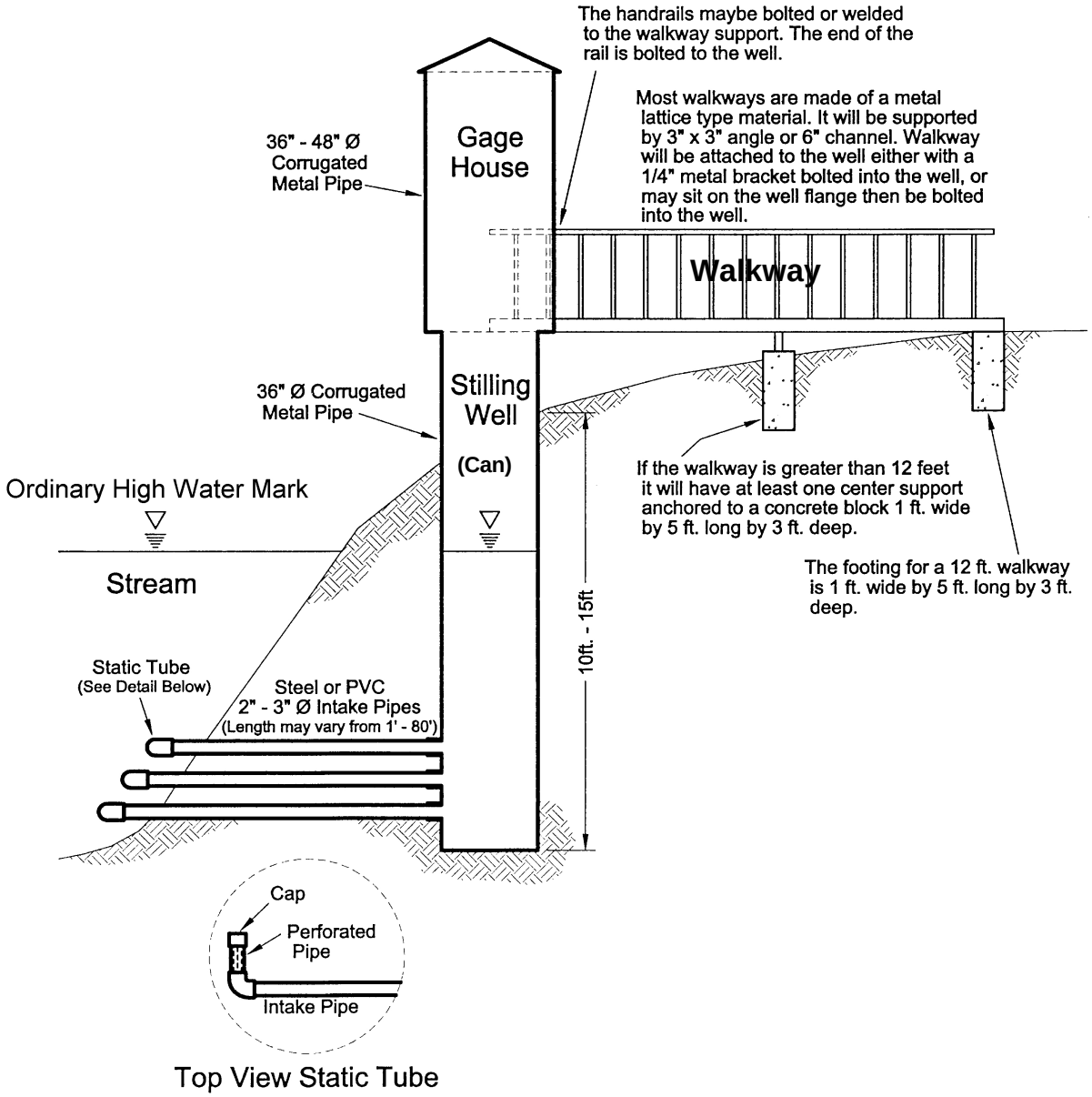

Figure 5. Typical stream gage detail.

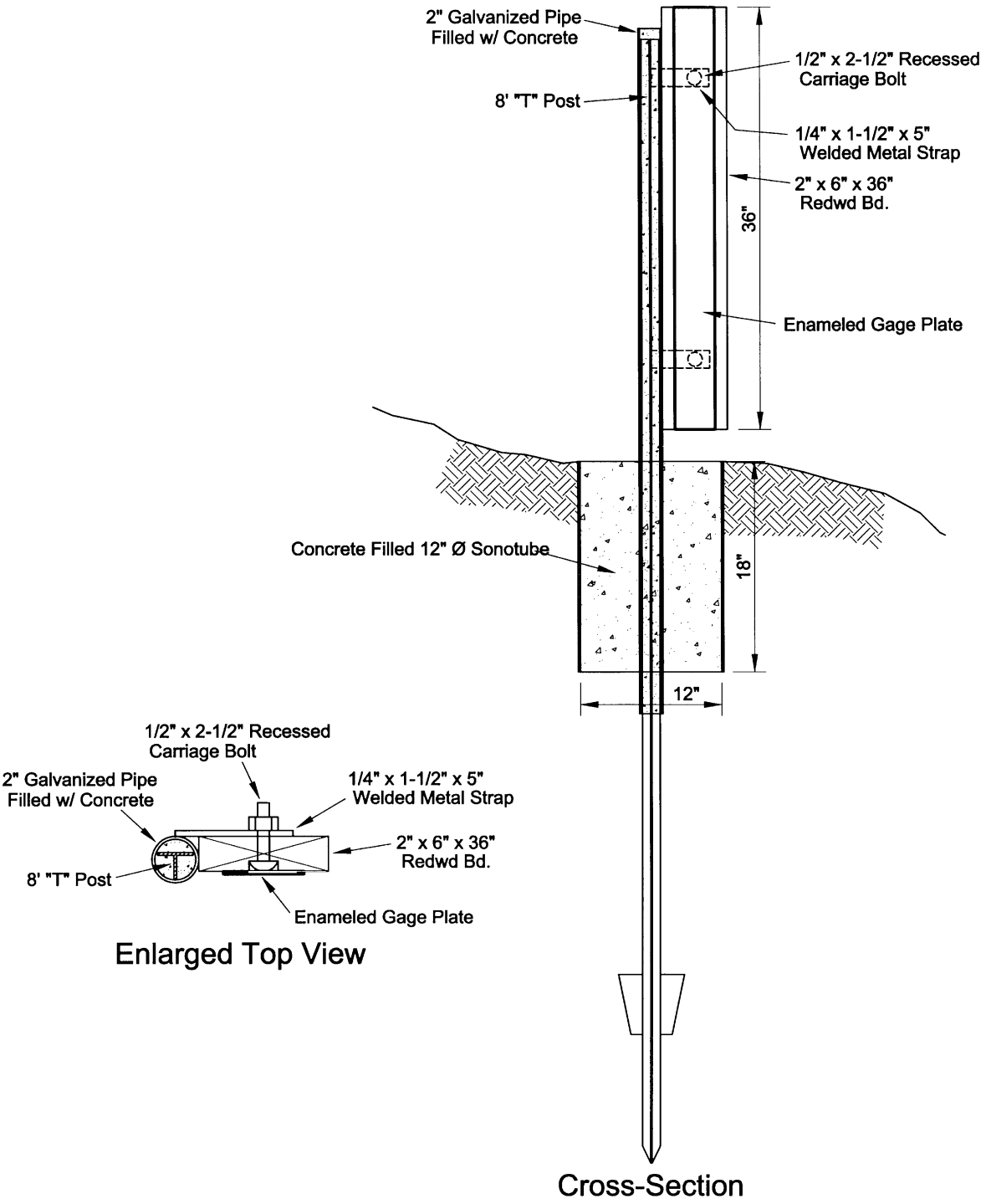

Figure 6. Typical staff gage.

DESCRIPTION OF ACTIVITIES

Bubbler gage installation
A bubbler gage is an alternative method of taking measurements that does not require the use of a stilling well. A bubbler gage may be installed in an existing stilling well or in a new structure that usually consists of a small house mounted on a 4 foot by 4 foot footing, connected to the channel by one 2 inch pipe.

Cable car installation
A cable car is suspended from the cableway and is used to move across the river to take in-channel flow measurements. When the car becomes deteriorated or malfunctions, replacement or removal for repairs may be required.

Cableway installation
The cableway is used to take in-channel flow measurements. It is equipped with a car that rides along a cable via pulleys, and seats one or two people. A cableway is installed in locations where measurements cannot be safely or effectively taken from a bridge or boat. In cases where the cableway is deteriorated or damaged, some part of it, or an entire new one, would be installed.

Can section/house replacement
A section of the can above ground or the house may become deteriorated or damaged and requiring replacement.

Change float
The float is a plastic floatation device, connected to data recording equipment within the house by a cable, and measures the level of water within the can. The float can deteriorate and become non-functional, requiring replacement. The float and attachment structures are entirely contained within the house.

Clean inside of house
The inside of the stream gage is subject to mold, mildew and algal build-up. To keep build-up to a minimum, the inside of the house will be cleaned with a dilute bleach solution, sprayed as a mist, with a manual pump sprayer. Heavy buildup may be scraped with a flat knife and the walls scrubbed with a brush or rag.

Data collection equipment installation
Data collection equipment are small mechanical and electronic devices that connect to the float or are part of a small bubbler gage device. When equipment becomes obsolete or non-functional, it must be replaced. All equipment is entirely contained within the house.

Flush can
The intake lines that connect the can to the river are regularly blocked by material transported in the water column. This prevents water from flowing freely in and out of the can, yielding incorrect water level readings that are measured by data collection equipment, and the lines must

be regularly cleared of debris. To do this, water is pumped into the can, thus flushing the collected material back into the stream. (Figure 7).

Intake line replacement
Damaged intakes, or those requiring relocation to a more effective stream orientation, will be replaced.

Paint can/house
The can and house are the most visible portions of the stream gage. They are often subject to vandalism and will rust over time. They are painted regularly to maintain appearance and to prevent corrosion.

Pole replacement
A row of 10 inch diameter wooden poles are situated downstream of the gage at the Eastside Bypass near El Nido. The poles are 8 to 10 feet high and are spaced 50 to 75 feet apart across the channel. During high flows, stream measurements are taken by boat and the poles are used for mooring. The poles periodically need replacement due to deterioration, destruction, and erosion.

Protective block replacement
Blocks of wood are placed around the trunk of a tree where a cable is used to anchor the house or cableway. The blocks of wood may deteriorate over time or are destroyed as the tree grows in diameter and require replacement.

Re-mark bridge
When in-channel flow measurements must be taken from a bridge, it is necessary to calibrate the guardrail or protective barrier from where the measurements will be taken. To achieve this, small calibration marks are painted along the top edge of the guardrail or protective barrier.

Removal and replacement or installation of stream gage and/or components
When a stream gage deteriorates, is abandoned, destroyed, or requires reconfiguring, the structure or some component, including the can, walkway, cableway, and intake lines, may be removed, replaced, or installed.

Run levels
Surveying equipment is used to ensure that staff gages and intake lines have not moved and that the staff gages are correctly calibrated.

Staff gage installation
A staff gage may be damaged, deteriorate, or be washed out requiring the installation of a new staff gage. Changes in channel morphology may also require the installation of a new staff gage. A typical staff gage is described in figure 6 on page 10.

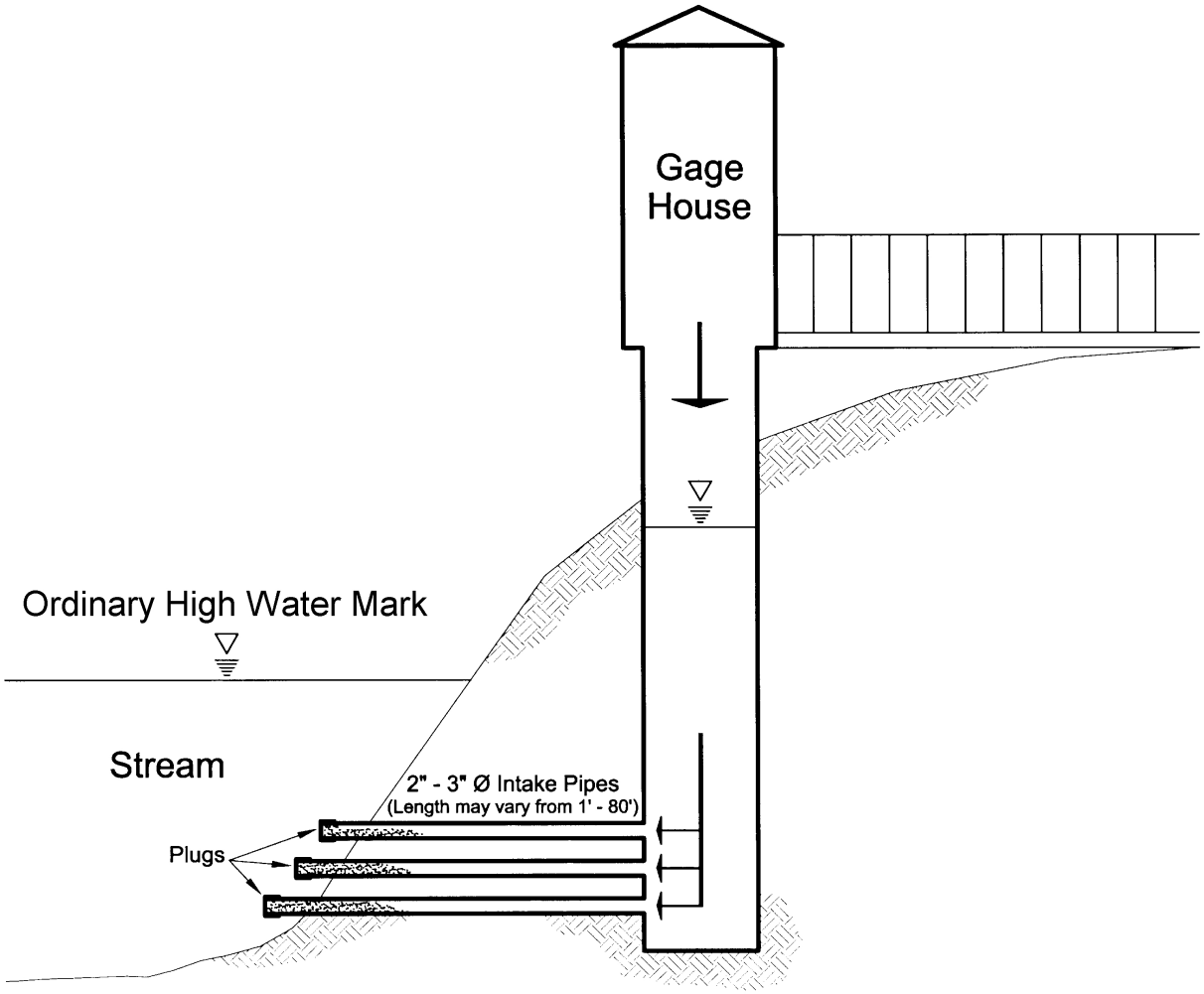

FLUSHING is accomplished by pumping a head of water into the well from the stream while keeping the end of the intake plugged. The plug is then released and, hopefully, the sand or silt will be driven out and communication restored. Typically, sand accumilates within about the first third of the 2" pipe from the stream inward.

Note: An 80' x 3" Ø intake pipe filled one third with sand or silt would yield approximately 1.3 cubic feet of sediment. The total maximum yield for three similar intake pipes would be approximately 3.9 cubic feet.

Figure 7. Can flushing detail.

Vegetation management

In-channel flow measurements must be conducted in portions of the stream that provide stable cross-sections, free from widely varying rates of flow caused by structural perturbations within the channel. Vegetation often creates aberrant flow patterns and dense growth on the channel bottom impedes the ability to lower flow measurement devices to the base of the channel. To minimize this problem, vegetation within 50 feet upstream of the measured cross-section, where in-channel flow measurements are taken, will be cleared. Vegetation management usually occurs adjacent to a bridge, and currently is only conducted at the San Joaquin River sites at Maze Road and Patterson.

Walkway replacement

The walkway is a small bridge that connects the stream gage to the bank and provides DWR staff access to the data collection equipment inside the house. Many of the current station walkways are constructed from wood and are often stolen, vandalized, or the wood deteriorates. Wooden walkways will be replaced with metal ones.

SITE DESCRIPTIONS

STANISLAUS COUNTY

1. Stanislaus River at Orange Blossom Bridge

Station Number: B03175
Location: UTM Coordinates: E697123 N4184475, Zone 10, NAD27
Township 02S/Range 11E-Section 04

Activities occurring once every five years to several times a year.	Activities conducted less than once every five years. Scheduled to occur within the next year.	Activities conducted less than once every five years but may occur within the next five years.
1. Flush can 2. Clean inside of house 3. Paint can/house 4. Re-mark bridge 5. Change float 6. Run levels	1. Intake line replacement	

Description:

This station is located about 5.0 miles east of Oakdale, between river miles 46 and 47, on the upstream side of Orange Blossom Road Bridge. Water flow through this station is controlled by Goodwin Dam, approximately 10 miles upstream, and by various diversions. The station is operated in cooperation with DWR's Division of Flood Management and is equipped with telemetry instruments that automatically send stream gage measurements to a central computer. The station is adjacent to the U.S. Army Corps of Engineers Orange Blossom Recreation Area.

This station was established in 1955, and the current gage was constructed on the Orange Blossom Bridge in 1967. Typically, the range of flow at this site is from zero to 8,000 cfs, however during a major 1950 flood event 52,000 cfs flows were estimated through the reach. Average annual flow is 400 cfs.

The streambed and surrounding substrate are a mixture of Hanford fine sandy loam and dredge and mine tailings (USDA-SCS, September 1964).

Vegetation at this site most closely resembles Great Valley Cottonwood Riparian Forest (Holland 1986). Plant species present include; Fremont cottonwood (*Populus fremontii*), box elder (*Acer negundo*) oak (*Quercus spp.*), willow (*Salix spp.*), Northern California black walnut (*Juglans hindsii*), blackberry (*Rubus spp.*), and California wild grape (*Vitis californica*). The site is adjacent to the U.S. Army Corp of Engineers Orange Blossom Recreation Area which is dominated by pecan (*Carya sp.*). The predominant land use around the stream gage is recreation and rural residential.

Sensitive species known to inhabit this area include Chinook salmon (*Oncorhynchus tshawytscha*) and Central Valley steelhead (*Oncorhynchus mykiss*). Additionally, the following species may potentially be found: San Joaquin roach (*Lavinia symmetricus spp.1*), hardhead (*Mylopharodon conocephalus*), western mastiff-bat (*Eumops perotis*), pallid bat (*Antrozous pallidus*), Townsend's western big-eared bat (*Plecotus townsendii townsendii*), Yuma myotis (*Myotis yumanensis*), riparian brush rabbit (*Sylvilagus bachmani riparius*), riparian woodrat (*Neotoma fuscipes riparia*), Yellow-breasted Chat (*Icteria virens*), Swainson's Hawk (*Buteo swainsoni*), Prairie Falcon (*Falco mexicanus*), western pond turtle (*Clemmys marmorata*), and delta button-celery (*Eryngyum racemosum*).

2. Stanislaus River at Koetitz Ranch

Station Number: B03115
Location: UTM Coordinates: E661421 N4173892 Zone 10 NAD27
Township 03S/Range 07E-Section 02

Activities occurring once every five years to several times a year.	Activities conducted less than once every five years. Scheduled to occur within the next year.	Activities conducted less than once every five years but may occur within the next five years.
1. Flush can 2. Clean inside of house 3. Paint can/house 4. Change float 5. Run levels	1. Walkway replacement 2. Cableway installation	1. Intake line replacement

Description:

This station is located on the left bank of the Stanislaus River, 9.35 miles upstream of the San Joaquin River and 3.7 miles southwest of Ripon between river miles 9 and 10. This station is accompanied by a cableway structure. The cable height is approximately 30 feet above the ordinary high water mark.

This station was originally erected in 1950 only to be washed out later that same year. The current station has been in place since 1951. A cable car was reinstalled twice, once in 1981, and again in 1992. The existing cableway connects an A-frame to a tree on the opposite bank. The tree fell into the river during the 1997 floods and the cableway is scheduled for immediate replacement near the existing site. The proposed cableway will be approximately 30 feet above the ordinary high water mark.

Typically, the range of flow at this station is zero to 8,000 cfs. The average annual flow is 500 cfs.

The streambed and surrounding substrate are a mixture of Columbia soils and Columbia fine sandy loam (USDA-SCS, September 1964).

Vegetation at the site most closely resembles Great Valley Cottonwood Riparian Forest (Holland 1986). Plant species present include; Fremont cottonwood (*Populus fremontii*), willow (*Salix spp.*), valley oak (*Quercus lobata*), blackberry (*Rubus spp.*), California wild grape (*Vitis californica*), mugwort (*Artemisia douglasiana*), black locust (*Robinia pseudoacacia*), blue

elderberry (*Sambucus mexicana*), rush (*Juncus spp.*), sedge (*Carex spp.*), water primrose (*Ludwigia peploides*) and non-native invasive vegetation such as star-thistle (*Centaurea solstitialis*). The project site is adjacent to the northeastern portion of Caswell Memorial State Park. Other land use in the area is agriculture.

Sensitive species known to inhabit this area include Chinook salmon (*Oncorhynchus tshawytscha*), Central Valley steelhead (*Oncorhynchus mykiss*), Greater Sandhill Crane (*Grus canadensis tabida*) and Swainson's Hawk (*Buteo swainsoni*). In addition, the following species may potentially be found: San Joaquin roach (*Lavinia symmetricus spp.1*), Hardhead (*Mylopharodon conocephalus*), Sacramento splittail (*Pogonichthys macrolepidotus*), Valley elderberry longhorn beetle (*Desmocerus californicus dimorphus*), molestan blister beetle (*Lytta molesta*), pallid bat (*Antrozous pallidus*), Townsend's western big-eared bat (*Plecotus townsendii townsendii*), Yuma myotis (*Myotis yumanensis*), Merced kangaroo rat (*Dipodomys heermanni dixoni*), riparian brush rabbit (*Sylvilagus bachmani riparius*), riparian woodrat (*Neotoma fuscipes riparia*), San Joaquin kit fox (*Vulpes macrotis mutica*), San Joaquin pocket mouse (*Perognathus inornatus*), Western Yellow-billed Cuckoo (*Coccyzus americanus occidentalis*), Burrowing Owl (*Athene cunicularia*), Prairie Falcon (*Falco mexicanus*), western pond turtle (*Clemmys marmorata*), brittlescale (*Atriplex depressa*), delta button-celery (*Eryngyum racemosum*), and slough thistle (*Cirsium crassicaule*).

Caswell Memorial State Park supports the only known populations of riparian brush rabbit and riparian woodrat.

3. San Joaquin River at Maze Road

Station Number: B07400
Location: UTM Coordinates: E656369 N4167268 Zone 10 NAD27
Township 03S/Range 07E-Section 29

Activities occurring once every five years to several times a year.	Activities conducted less than once every five years. Scheduled to occur within the next year.	Activities conducted less than once every five years but may occur within the next five years.
1. Flush can 2. Clean inside of house 3. Paint can/house 4. Re-mark bridge 5. Change float 6. Run levels 7. Vegetation management	1. Can section/house replacement	

Description:

This station is located 13 miles west of Modesto between river miles 77 and 78, on the downstream side of the Highway 132 (Maze Road) bridge.

The original station was erected 1943 and was replaced in 1971 along with the Highway 132 bridge.

The average range of flows for this station is from zero to 45,000 cfs. The average annual flow for this station is 1,500 cfs.

The streambed and surrounding substrate are composed of Columbia soils (USDA-SCS, September 1964).

Vegetation at the site most closely resembles Willow Riparian, a subtype of Great Valley Cottonwood Riparian Forest (Holland, 1986). Plant species present include; willow (*Salix spp.*), valley oak (*Quercus lobata*), Fremont cottonwood (*Populus fremontii*), cattail (*Typha spp.*), mugwort (*Artemesia douglasiana*), tree tobacco (*Nicotiana glauca*), and water primrose (*Ludwigia peploides*). Beyond the floodplain, land use to the west of the stream gage is agriculture, east of the gage land use is designated as the Caltrans Botanical Management Area.

Sensitive species known to inhabit this area include Chinook salmon (*Oncorhynchus tshawytscha*) and Central Valley steelhead (*Oncorhynchus mykiss*). In addition, the following species may potentially be found: San Joaquin roach (*Lavinia symmetricus spp.1*), green sturgeon (*Acipenser medirostris*), Sacramento splittail (*Pogonichthys macrolepidotus*), molestan blister beetle (*Lytta molesta*), pallid bat (*Antrozous pallidus*), Townsend's western big-eared bat (*Plecotus townsendii townsendii*), Yuma myotis (*Myotis yumanensis*), riparian brush rabbit (*Sylvilagus bachmani riparius*), San Joaquin kit fox (*Vulpes macrotis mutica*), San Joaquin pocket mouse (*Perognathus inornatus*), riparian woodrat (*Neotoma fuscipes riparia*), Merced kangaroo rat (*Dipodomys heermanni dixoni*), Swainson's Hawk (*Buteo swainsoni*), Burrowing Owl (*Athene cunicularia*), Prairie Falcon (*Falco mexicanus*), Western Yellow-billed Cuckoo (*Coccyzus americanus occidentalis*), California Horned Lark (*Eremophila alpestris actia*), western pond turtle (*Clemmys marmorata*), brittlescale (*Atriplex depressa*), slough thistle (*Cirsium crassicaule*), and delta button-celery (*Eryngyum racemosum*).

4. Dry Creek near Modesto

Station Number: B04130
Location: UTM Coordinates: E683436 N4169589 Zone 10 NAD27
Township 3S/Range 9E-Section 24

Activities occurring once every five years to several times a year.	Activities conducted less than once every five years. Scheduled to occur within the next year.	Activities conducted less than once every five years but may occur within the next five years.
1. Flush can 2. Clean inside of house 3. Paint can/house 4. Re-mark bridge 5. Change float 6. Run levels	1. Walkway replacement	1. Intake line replacement 2. Protective block replacement

Description:

This station is located 4 miles east of Modesto, 0.1 miles downstream of Claus Road between river miles five and six on the left bank of Dry Creek.

The original station was established in 1928. A new station was installed at the present location in 1984.

The average range of flows for this station is from zero to 8,500 cfs. The average annual flow is 100 cfs.

The streambed and surrounding substrate are a mixture of Bear Creek clay loam and Tujunga sandy loam (USDA-SCS, September 1964).

Vegetation at this site most closely resembles Great Valley Valley Oak Riparian Riparian Forest as described in Holland (1986). Plant species present include; valley oak (*Quercus lobata*), Northern California black walnut (*Juglans hindsii*), box elder (*Acer negundo*), blackberry (*Rubus spp.*), blue elderberry (*Sambucus mexicana*), sedge (*Carex spp.*), and water primrose (*Ludwigia peploides*). Land use north of the project site is urban, south of the site land use is agriculture.

The following species may potentially be found: Chinook salmon (*Oncorhynchus tshawytscha*) and Central Valley steelhead (*Oncorhynchus mykiss*), hardhead (*Mylopharadon conocephalus*), San Joaquin roach (*Lavinia symmetricus spp.1*), Valley elderberry longhorn beetle (*Desmocerus californicus dimorphus*), molestan blister beetle (*Lytta molesta*), pallid bat (*Antrozous pallidus*), Townsend's western big-eared bat (*Plecotus townsendii townsendii*), Yuma Myotis (*Myotis yumanensis*), San Joaquin kit fox (*Vulpes macrotis mutica*), San Joaquin pocket mouse (*Perognathus inornatus*), Merced kangaroo rat (*Dipodomys heermanni dixoni*), Swainson's Hawk (*Buteo swainsoni*), Burrowing Owl (*Athene cunicularia*), Prairie Falcon (*Falco mexicanus*), and western pond turtle (*Clemmys marmorata*).

5. Tuolumne River at Hickman Bridge

Station Number: B04150
Location: UTM Coordinates: E697235 N4167273 Zone 10 NAD27
Township 03S/Range 11E-Section

Activities occurring once every five years to several times a year.	Activities conducted less than once every five years. Scheduled to occur within the next year.	Activities conducted less than once every five years but may occur within the next five years.
1. Flush can 2. Clean inside of house 3. Paint can/house 4. Change float 5. Run levels	1. Installation of stream gage 2. Cableway installation 3. Staff gage installation	

Description:

This station was located south of the town of Waterford, downstream of the Hickman Road bridge, on the right bank of the Tuolumne River. The station was erected in 1932 but washed out during a 1997 flood event. To avoid data loss, a temporary station was installed in December of 2001. The temporary station is located on property owned by the City of Waterford, adjacent to the City's water treatment facility, approximately one-half mile downstream of the original site, between river miles 31 and 32 on the right bank of the Tuolumne River. Currently, the station consists of a house mounted on a platform that is anchored to the ground. One intake line extends from the house into the channel. Installation of a permanent gage replacing the temporary structure is planned within a year. The permanent gage will occupy the same site, but will include additional intake lines, a stillwell, and walkway. A cableway will also be constructed as part of this station. The cable height will be approximately 24 feet above the ordinary high water mark.

The average range of flows for this station is from zero to 74,000 cfs. The average annual flow is 300 cfs.

The streambed and surrounding substrate is a mixture of Grangeville very fine sandy loam that is slightly saline-alkali with terrace escarpments (USDA-SCS, September 1964).

Vegetation at this site most closely resembles Great Valley Mixed Riparian Forest as described in Holland (1986). Plant species present include; Fremont cottonwood (*Populus fremontii*),

valley oak (*Quercus lobata*), button bush (*Cephalanthus occidentalis*), willow (*salix spp.*), Northern California black walnut (*Juglans hindsii*), tree tobacco (*Nicotiana glauca*), blackberry (*Rubus spp.*), stinging nettle (*Urtica dioica*), poison hemlock (*Conium maculatum*), and mugwort (*Artemesia douglasiana*). A road separates the gage from blue elderberry (*Sambucus mexicana*) that grows approximately 75 feet from gage, on the opposite side of the road. The water treatment facility has identified the elderberries as valley elderberry longhorn beetle (*Desmocerus californicus dimorphus*) habitat, and has a sign posted advising against disturbing the plants. Land use on the right bank is urban and industrial. A commercial nursery is situated on the left bank.

Sensitive species known to inhabit this area include Chinook salmon (*Oncorhynchus tshawytscha*) and Central Valley steelhead (*Oncorhynchus mykiss*). In addition, the following species may potentially be found: San Joaquin roach (*Lavinia symmetricus spp.1*), hardhead (*Mylopharadon conocephalus*), molestan blister beetle (*Lytta molesta*), valley elderberry longhorn beetle (*Desmocerus californicus dimorphus*), pallid bat (*Antrozous pallidus*), Townsend's western big-eared bat (*Plecotus townsendii townsendii*), Yuma myotis (*Myotis yumanensis*), riparian brush rabbit (*Sylvilagus bachmani riparius*), San Joaquin kit fox (*Vulpes macrotis mutica*), San Joaquin pocket mouse (*Perognathus inornatus*), riparian woodrat (*Neotoma fuscipes riparia*), Merced kangaroo rat (*Dipodomys heermanni dixoni*), Swainson' s Hawk (*Buteo swainsoni*), Prairie Falcon (*Falco mexicanus*), western pond turtle (*Clemmys marmorata*), and delta button-celery (*Eryngyum racemosum*).

6. San Joaquin River at Patterson Bridge

Station Number: B07200
Location: UTM Coordinates: E669647 N4151600 Zone 10 NAD27
Township 05S/Range 08E-Section 15

Activities occurring once every five years to several times a year.	Activities conducted less than once every five years. Scheduled to occur within the next year.	Activities conducted less than once every five years but may occur within the next five years.
1. Flush can 2. Clean inside of house 3. Paint can/house 4. Re-mark bridge 5. Change float 6. Run levels 7. Vegetation management		

Description:

The gage is attached to the downstream side of the Las Palmas Avenue bridge east of Patterson between river miles 97-98 in Stanislaus County.

This station was originally installed on the Crows Landing Bridge and was moved to its current location in 1972.

The average range of flows for this station is from zero to 25,000 cfs. The average annual flow is 1200 cfs.

The streambed and surrounding substrate is composed of Columbia soils, channeled (USDA-SCS, September 1964).

Vegetation at this site most closely resembles Great Valley Mixed Riparian Forest as described by Holland (1986). Plant species present include; willow (*Salix spp.*), Fremont cottonwood (*Populus fremontii*), valley oak (*Quercus lobata*), mugwort (*Artemesia douglasiana*), sedge (*Carex spp.*), water hyacinth (*Eichhornia crassipes*), and non-native herbaceous grasses. Land use west of the project site is rural residential, land use to the east is agriculture.

Sensitive species known to inhabit this area include Chinook salmon (*Oncorhynchus tshawytscha*) and Central Valley steelhead (*Oncorhynchus mykiss*). In addition, the following species may potentially be found: San Joaquin roach (*Lavinia symmetricus spp.1*), hardhead (*Mylopharadon conocephalus*), green sturgeon (*Acipenser medirostris*), moestan blister beetle (*Lytta moesta*), valley elderberry longhorn beetle (*Desmocerus californicus dimorphus*), pallid bat (*Antrozous pallidus*), Townsend's western big-eared bat (*Plecotus townsendii townsendii*), Yuma myotis (*Myotis yumanensis*), western red bat (*Lasiurus blossevillii*), riparian brush rabbit (*Sylvilagus bachmani riparius*), San Joaquin kit fox (*Vulpes macrotis mutica*), San Joaquin pocket mouse (*Perognathus inornatus*), riparian woodrat (*Neotoma fuscipes riparia*), Merced kangaroo rat (*Dipodomys heermanni dixoni*), California Horned Lark (*Eremophila alpestris actia*), Burrowing Owl (*Athene cunicularia*), Swainson's Hawk (*Buteo swainsoni*), Prairie Falcon (*Falco mexicanus*), western pond turtle (*Clemmys marmorata*), San Joaquin whipsnake (*Masticophis lateralis euryxanthus*), delta button-celery (*Eryngyum racemosum*), big tarplant (*Blepharizonia plumosa ssp. plumosa*), heartscale (*Atriplex cordulata*), and diamond-petaled California poppy (*Eschscholzia rhombipetala*).

7. Orestimba Creek below Highway 33

Station Number: B08735
Location: UTM Coordinates: E672048 N4138319 Zone 10 NAD27
Township 06S/Range 08E-Section 26

Activities occurring once every five years to several times a year.	Activities conducted less than once every five years. Scheduled to occur within the next year.	Activities conducted less than once every five years but may occur within the next five years.
1. Flush can 2. Clean inside of house 3. Paint can/house 4. Re-mark bridge 5. Change float 6. Run levels	1. Removal and replacement of stream gage	

Description:

This station is located 400 feet downstream of Highway 33, approximately 1 mile south of the intersection between Crows Landing Road and Highway33 in Stanislaus County.

The station was erected in 1948. While the creek is considered seasonal in nature, summer irrigation runoff results in highly variable year-round flows through the gaging station. The existing station no longer functions properly and is scheduled for immediate replacement. The location of the proposed station is approximately 150 feet upstream of the existing one, within the Santa Fe Railroad right-of-way, adjacent to the downstream side of Highway 33. Relocation of the station will reduce construction and maintenance impacts and will improve DWR staff access to the station.

The average range of flows for this station is from zero to 14,000 cfs. The average annual flow is 25 cfs.

The streambed and surrounding substrate is a mixture of Sacramento silty clay and undifferentiated Columbia soils (USDA-SCS, January 1948).

Vegetation at this site is herbaceous with scattered willows and emergent marsh. Plant species present include; willow (*Salix spp.*), rush (*Juncus spp.*), sedge (*Carex spp.*), dock (*Rumex sp.*),

star-thistle (*Centaurea solstitialis*), and various grasses. Land use on the right bank is rural residential, on the left bank land use is agriculture.

The following species may potentially be found: Sacramento splittail (*Pogonichthys macrolepidotus*), San Joaquin roach (*Lavinia symmetricus spp.1*), pallid bat (*Antrozous pallidus*), Townsend's western big-eared bat (*Plecotus townsendii townsendii*), Yuma myotis (*Myotis yumanensis*), San Joaquin kit fox (*Vulpes macrotis mutica*), San Joaquin pocket mouse (*Perognathus inornatus*), Merced kangaroo rat (*Dipodomys heermanni dixoni*), California Horned Lark (*Eremophila alpestris actia*), Swainson's Hawk (*Buteo swainsoni*), Burrowing Owl (*Athene cunicularia*), Prairie Falcon (*Falco mexicanus*), western pond turtle (*Clemmys marmorata*), delta button-celery (*Eryngyum racemosum*), heartscale (*Atriplex cordulata*), and brittlescale (*Atriplex depressa*).

MERCED COUNTY

8. Merced River near Snelling

Station Number: B05170
Location: UTM Coordinates: E725374 N4153643 Zone 10 NAD27
Township 05S/Range 14E-Section 17

Activities occurring once every five years to several times a year.	Activities conducted less than once every five years. Scheduled to occur within the next year.	Activities conducted less than once every five years but may occur within the next five years.
1. Flush can 2. Clean inside of house 3. Paint can/house 4. Re-mark bridge 5. Change float 6. Run levels		1. Intake line replacement 2. Staff gage installation

Description:

This station is on the left bank, approximately one-tenth of a mile downstream from the "G" Street Bridge, between river miles 46-47 in Merced County.

This station was established in 1928 on the Cox Ferry Road Bridge, and was later relocated to the new Cox Ferry Road Bridge in 1953. In 1958, the gage was established at its present location.

The average range of flows for this station is from zero to 6000 cfs. The average annual flow is 250 cfs.

The streambed and surrounding substrate are tailings from an unspecified source (USDA-SCS, July 1962).

Vegetation at this site most closely resembles Great Valley Valley Oak Riparian Forest as described by Holland (1986). Plant species present include; valley oak (*Quercus lobata*), button bush (*Cephalanthus occidentalis*), western sycamore (*Platanus racemosa*), willow (*Salix spp.*), Fremont cottonwood (*Populus fremontii*), black locust (*Robinia pseudoacacia*), blue elderberry

(*Sambucus mexicana*), blackberry (*Rubus spp.*), sedge (*Carex spp.*), and dock (*Rumex spp.*). Land use in the vicinity is grazing pasture.

Sensitive species known to inhabit this area include Chinook salmon (*Oncorhynchus tshawytscha*) and Central Valley steelhead (*Oncorhynchus mykiss*). In addition, the following species may potentially be found: Kern brook lamprey (*Lampetra hubbsi*), San Joaquin roach (*Lavinia symmetricus spp.1*), hardhead (*Mylopharadon conocephalus*), valley elderberry longhorn beetle (*Desmocerus californicus dimorphus*), molestan blister beetle (*Lytta molesta*), pallid bat (*Antrozous pallidus*), Townsend's western big-eared bat (*Plecotus townsendii townsendii*), Yuma myotis (*Myotis yumanensis*), San Joaquin kit fox (*Vulpes macrotis mutica*), San Joaquin pocket mouse (*Perognathus inornatus*), Merced kangaroo rat (*Dipodomys heermanni dixoni*), Bald Eagle (*Haliaeetus leucocephalus*), Swainson's Hawk (*Buteo swainsoni*), Cooper's Hawk (*Accipiter cooperi*), Northern Harrier (*Circus cyaneus*), White-tailed Kite (*Elanus leucurus*), Burrowing Owl (*Athene cunicularia*), Prairie Falcon (*Falco mexicanus*), western pond turtle (*Clemmys marmorata*), giant garter snake (*Thamnophis gigas*), delta button-celery (*Eryngyum racemosum*), Hartweg's golden sunburst (*Pseudobahia bahiifolia*), and Hoover's calycadenia (*Calycadenia hooveri*).

9. Merced River near Cressey

Station Number: B05155
Location: UTM Coordinates: E706724 N4144367 Zone 10 NAD27
Township 06S/Range 12E-Section 09

Activities occurring once every five years to several times a year.	Activities conducted less than once every five years. Scheduled to occur within the next year.	Activities conducted less than once every five years but may occur within the next five years.
1. Flush can 2. Clean inside of house 3. Paint can/house 4. Re-mark bridge 5. Change float 6. Run levels	1. Walkway replacement	1. Intake line replacement

Description:

This station is located on the right bank, north of the town of Cressey, between river miles 27-28 in Merced County.

This station was established on the left bank, in 1941, approximately 200 feet above the old McSwain Bridge. The station has been located on the right bank since 1960.

The average range of flows for this station is from zero to 8000 cfs. The average annual flow is 300 cfs.

The streambed and surrounding substrate is composed of Grangeville loam (USDA-SCS, July 1962).

Vegetation at this site most closely resembles Great Valley Valley Oak Riparian Forest as described by Holland (1986). Plant species in the present include; valley oak (*Quercus lobata*), box elder (*Acer negundo*), blue elderberry (*Sambucus mexicana*), and sedge (*Carex spp.*). The surrounding land use is agriculture.

Sensitive species known to inhabit this area include Chinook salmon (*Oncorhynchus tshawytscha*) and Central Valley steelhead (*Oncorhynchus mykiss*). In addition, the following species may potentially be found: Kern brook lamprey (*Lampetra hubbsi*), San Joaquin roach

(*Lavinia symmetricus spp.1*), hardhead (*Mylopharadon conocephalus*), Sacramento splittail (*Pogonichthys macrolepidotus*), valley elderberry longhorn beetle (*Desmocerus californicus dimorphus*), molestan blister beetle (*Lytta molesta*), pallid bat (*Antrozous pallidus*), Townsend's western big-eared bat (*Plecotus townsendii townsendii*), Yuma myotis (*Myotis yumanensis*), western red bat (*Lasiurus blossevillii*), San Joaquin kit fox (*Vulpes macrotis mutica*), San Joaquin pocket mouse (*Perognathus inornatus*), Merced kangaroo rat (*Dipodomys heermanni dixoni*), Swainson's Hawk (*Buteo swainsoni*), Cooper's Hawk (*Accipiter cooperi*), Northern Harrier (*Circus cyaneus*), White-tailed Kite (*Elanus leucurus*), Burrowing Owl (*Athene cunicularia*), Prairie Falcon (*Falco mexicanus*), western pond turtle (*Clemmys marmorata*), giant garter snake (*Thamnophis gigas*), delta button-celery (*Eryngyum racemosum*), and Merced monardella (*Monardella leucocephala*).

10. Merced River near Stevinson

Station Number: B05125
Location: UTM Coordinates: E683350 N4137815 Zone 10 NAD27
Township 6S/Range9E-Section 36 SW1/4 NE1/4

Activities occurring once every five years to several times a year.	Activities conducted less than once every five years. Scheduled to occur within the next year.	Activities conducted less than once every five years but may occur within the next five years.
1. Flush can 2. Clean inside of house 3. Paint can/house 4. Change float 5. Run levels	1. Station replacement 2. Cable car installation	

Description:

This station is on the right bank, approximately 5.3 miles northwest of Stevinson, between river miles 4 and 5 in Merced County. This station is accompanied by a cableway structure. The cable height is approximately 30 feet above the ordinary high water mark.

This station was erected in 1947. The gage is severely deteriorated at the base and could wash downstream in the next flood event. To maintain consistent data recording and prevent potential property damage and human hazards, the gage is scheduled for immediate replacement.

The average range of flows for this station is from zero to 6000 cfs. The average annual flow is 250 cfs.

The streambed and surrounding substrate is a mixture of Hanford fine sandy loam, channeled (USDA-SCS, July 1962).

Vegetation at this site most closely resembles Great Valley Mixed Riparian Forest as described by Holland (1986). Plant species present include; willow (*Salix spp.*), Northern California black walnut (*Juglans hindsii*), valley oak (*Quercus lobata*), tree tobacco (*Nicotiana glauca*), mugwort (*Artemesia douglasiana*), and water hyacinth (*Eichhornia crassipes*). Land use in the surrounding area is agriculture.

Sensitive species known to inhabit this area include Chinook salmon (*Oncorhynchus tshawytscha*) and Central Valley steelhead (*Oncorhynchus mykiss*). In addition, the following species may potentially be found: Kern brook lamprey (*Lampetra hubbsi*), San Joaquin roach (*Lavinia symmetricus spp.1*), hardhead (*Mylopharadon conocephalus*), green sturgeon (*Acipenser medirostris*), Sacramento splittail (*Pogonichthys macrolepidotus*), valley elderberry longhorn beetle (*Desmocerus californicus dimorphus*), pallid bat (*Antrozous pallidus*), Townsend's western big-eared bat (*Plecotus townsendii townsendii*), Yuma myotis (*Myotis yumanensis*), San Joaquin kit fox (*Vulpes macrotis mutica*), San Joaquin pocket mouse (*Perognathus inornatus*), Merced kangaroo rat (*Dipodomys heermanni dixoni*), Bald Eagle (*Haliaeetus leucocephalus*), Swainson's Hawk (*Buteo swainsoni*), Northern Harrier (*Circus cyaneus*), Burrowing Owl (*Athene cunicularia*), Prairie Falcon (*Falco mexicanus*), Tricolored Blackbird (*Agelaius tricolor*), western pond turtle (*Clemmys marmorata*), giant garter snake (*Thamnophis gigas*), California red-legged frog (*Rana aurora draytonii*), brittlescale (*Atriplex depressa*), delta button-celery (*Eryngyum racemosum*), and heartscale (*Atriplex cordulata*).

11. San Joaquin River near Stevinson

Station Number B07400
Location: UTM Coordinates: E690574 N4129562 Zone 10 NAD27
Township 07S/Range 10E-Section 26

Activities occurring once every five years to several times a year.	Activities conducted less than once every five years. Scheduled to occur within the next year.	Activities conducted less than once every five years but may occur within the next five years.
1. Flush can 2. Clean inside of house 3. Paint can/house 4. Re-mark bridge 5. Change float 6. Run levels		1. Intake line replacement

Description:

This station is attached to the Highway 165 (Landers Avenue) Bridge, approximately 2.3 miles south of Stevinson, between river miles 133 and 134 in Merced County.

This station was established in 1961.

The average range of flows for this station is from zero to 24,000 cfs. The average annual flow is 100 cfs.

The streambed and surrounding substrate is Rossi clay loam that is strongly saline-alkaline (USDA-SCS, July 1962).

Vegetation at this site most closely resembles Great Valley Mixed Riparian Forest as described by Holland (1986), although the area directly adjacent to the gage is more disturbed. Plant species present include; willow (*Salix spp.*), Fremont cottonwood (*Populus fremontii*), valley oak (*Quercus lobata*), dock (*Rumex sp.*), star-thistle (*Centaurea solstitialis*), dog-fennel (*Anthemis cotula*), mustard (*Brassica sp.*), and poison hemlock (*Conium maculatum*). Land use to the west of the project site is designated as U. S. Fish and Wildlife Service Refuge, and California State Parks, Great Valley Grassland Preserve. Land use to the east of the river corridor is agriculture.

The following species may potentially be found: Chinook salmon (*Oncorhynchus tshawytscha*), Central Valley steelhead (*Oncorhynchus mykiss*), Kern brook lamprey (*Lampetra hubbsi*), San Joaquin roach (*Lavinia symmetricus spp.1*), Sacramento splittail (*Pogonichthys macrolepidotus*), valley elderberry longhorn beetle (*Desmocerus californicus dimorphus*), molestan blister beetle (*Lytta molesta*), pallid bat (*Antrozous pallidus*), Townsend's western big-eared bat (*Plecotus townsendii townsendii*), Yuma myotis (*Myotis yumanensis*), San Joaquin kit fox (*Vulpes macrotis mutica*), San Joaquin pocket mouse (*Perognathus inornatus*), Merced kangaroo rat (*Dipodomys heermanni dixoni*), Swainson's Hawk (*Buteo swainsoni*), Northern Harrier (*Circus cyaneus*), Burrowing Owl (*Athene cunicularia*), Prairie Falcon (*Falco mexicanus*), western pond turtle (*Clemmys marmorata*), giant garter snake (*Thamnophis gigas*), silvery legless lizard (*Anniella pulchra pulchra*), California red-legged frog (*Rana aurora draytonii*), delta button-celery (*Eryngyum racemosum*), San Joaquin saltbush (*Atriplex joaquiniana*), heartscale (*Atriplex cordulata*), brittlescale (*Atriplex depressa*), and hispid bird's-beak (*Cordylanthus mollis ssp. hispidus*).

12. Salt Slough near Stevinson

Station Number B00470
Location: UTM Coordinates: E690586 N4124325 Zone 10 NAD27
Township 08S/Range 10E-Section 10

Activities occurring once every five years to several times a year.	Activities conducted less than once every five years. Scheduled to occur within the next year.	Activities conducted less than once every five years but may occur within the next five years.
1. Flush can 2. Clean inside of house 3. Paint can/house 4. Change float 5. Run levels		1. Intake line replacement

Description:

This station is adjacent to the Highway 165 (Lander Avenue) Bridge, approximately 5.4 miles south of Stevinson, in Merced County. This station is accompanied by a cableway structure. The cable height is approximately 20 feet above the ordinary high water mark.

This station was established in 1968 and was relocated to its present location in 1986.

The average range of flows for this station is from zero to 1000 cfs. The average annual flow is 150 cfs.

The streambed and surrounding substrate are Columbia soils, channeled (USDA-SCS, July 1962).

Vegetation at this site is disturbed. Plant species present include; willow (*Salix spp.*), mustard (*Brassica spp.*), star-thistle (*Centaurea solstitialis*), milkweed (*Asclepias sp.*), common spikeweed (*Hemizonia pungens*), water hyacinth (*Eichhornia crassipes*), and various grasses. Land use on the west side of Landers Avenue is designated by California State Parks as the Great Valley Grasslands State Preserve. Land on the east side of Landers Avenue is part of The U.S. Fish and Wildlife Service San Luis Wildlife Refuge.

The following species may potentially be found: Kern brook lamprey (*Lampetra hubbsi*), San Joaquin roach (*Lavinia symmetricus spp.1*), Sacramento splittail (*Pogonichthys macrolepidotus*), pallid bat (*Antrozous pallidus*), Townsend's western big-eared bat (*Plecotus townsendii townsendii*), Yuma myotis (*Myotis yumanensis*), San Joaquin kit fox (*Vulpes macrotis mutica*), San Joaquin pocket mouse (*Perognathus inornatus*), Merced kangaroo rat (*Dipodomys heermanni dixoni*), Swainson's Hawk (*Buteo swainsoni*), Cooper's Hawk (*Accipiter cooperi*), Northern Harrier (*Circus cyaneus*), Burrowing Owl (*Athene cunicularia*), Prairie Falcon (*Falco mexicanus*), Tricolored Blackbird (*Agelaius tricolor*), western pond turtle (*Clemmys marmorata*), giant garter snake (*Thamnophis gigas*), silvery legless lizard (*Anniella pulchra pulchra*), California red-legged frog (*Rana aurora draytonii*), delta button-celery (*Eryngyum racemosum*), hispid bird's-beak (*Cordylanthus mollis ssp. Hispidus*), San Joaquin saltbush (*Atriplex joaquiniana*), heartscale (*Atriplex cordulata*), and brittlescale (*Atriplex depressa*).

13. Bear Creek near Eastside Canal

Station Number: B05516
Location: UTM Coordinates: E702122 N4125293 Zone 10 NAD27
Township 08S/Range11E-Section12

Activities occurring once every five years to several times a year.	Activities conducted less than once every five years. Scheduled to occur within the next year.	Activities conducted less than once every five years but may occur within the next five years.
1. Flush can 2. Clean inside of house 3. Paint can/house 4. Change float 5. Run levels	1. Walkway replacement 2. Intake line replacement 3. Can section/house replacement	

Description:

This station is located on the right bank, 0.1 mile downstream of the Eastside Canal in Merced County.

This site was established in 1966 and the stream gage was installed in 1980.

The average range of flows for this station is from zero to 2000 cfs. The average annual flow is 200 cfs.

The streambed and surrounding substrate is Lewis clay that is moderately saline-alkali (USDA-SCS, July 1962).

Vegetation in the area is herbaceous with scattered willows and emergent marsh. Plant species present include; willow (*Salix spp.*), mugwort (*Artemesia douglasiana*), cocklebur (*Xanthium sp.*), blackberry (*Rubus sp.*), dock (*Rumex sp.*), sedge (*Carex spp.*), rush (*Juncus spp.*), cattail (*Typha sp.*), and various grasses. The area directly north of the stream gage is native habitat; the area south of the stream gage is agricultural fields. Land use in the area is grazing.

The following species may potentially be found: Kern brook lamprey (*Lampetra hubbsi*), San Joaquin roach (*Lavinia symmetricus spp.1*), Sacramento splittail (*Pogonichthys macrolepidotus*), molestan blister beetle (*Lytta molesta*), pallid bat (*Antrozous pallidus*), Townsend's western big-eared bat (*Plecotus townsendii townsendii*), Yuma myotis (*Myotis yumanensis*), San Joaquin kit fox (*Vulpes macrotis mutica*), San Joaquin pocket mouse (*Perognathus inornatus*), Merced

kangaroo rat (*Dipodomys heermanni dixoni*), Swainson's Hawk (*Buteo swainsoni*), Burrowing Owl (*Athene cunicularia*), Prairie Falcon (*Falco mexicanus*), American White Pelican (*Pelecanus erythrorhynchos*), Tricolored Blackbird (*Agelaius tricolor*), western pond turtle (*Clemmys marmorata*), giant garter snake (*Thamnophis gigas*), silvery legless lizard (*Anniella pulchra pulchra*), delta button-celery (*Eryngyum racemosum*), hispid bird's-beak (*Cordylanthus mollis ssp. Hispidus*), heartscale (*Atriplex cordulata*), brittlescale (*Atriplex depressa*), and Sanford's arrowhead (*Sagittaria sanfordii*).

14. Eastside Bypass below Mariposa Bypass

Station Number: B00416
Location: UTM Coordinates: E704431 N4120018 Zone 10 NAD27
Township 08S/Range12E-Section 30

Activities occurring once every five years to several times a year.	Activities conducted less than once every five years. Scheduled to occur within the next year.	Activities conducted less than once every five years but may occur within the next five years.
1. Flush can 2. Clean inside of house 3. Paint can/house 4. Change float 5. Run levels	1. Walkway replacement	1. Intake line replacement

Description:

The station is located on the right bank, 0.3 miles downstream of the Eastside Bypass bifurcation structure connecting the Mariposa Bypass and the Eastside Bypass, in Merced County.

This station was erected November 1979.

The average range of flow for this station is from zero to 10,000 cfs. The average annual flow is 25 cfs.

The streambed and surrounding substrate is a mixture of Rossi clay and Rossi clay loam that is strongly saline-alkali (USDA-SCS, July 1962).

Vegetation in the area is herbaceous with scattered willows. Plant species present include; willow (*Salix spp.*), star-thistle (*Centaurea solstitialis*), common spikeweed (*Hemizonia pungens*), dog-fennel (*Anthemus cotula*), and various grasses. Land use in the project area is grazing.

The following species may potentially be found: Kern brook lamprey (*Lampetra hubbsi*), San Joaquin roach (*Lavinia symmetricus spp.1*), hardhead (*Mylopharadon conocephalus*), Sacramento splittail (*Pogonichthys macrolepidotus*), molestan blister beetle (*Lytta molesta*),

pallid bat (*Antrozous pallidus*), Townsend's western big-eared bat (*Plecotus townsendii townsendii*), Yuma myotis (*Myotis yumanensis*), San Joaquin kit fox (*Vulpes macrotis mutica*), San Joaquin pocket mouse (*Perognathus inornatus*), riparian woodrat (*Neotoma fuscipes riparia*), Merced kangaroo rat (*Dipodomys heermanni dixoni*), Swainson's Hawk (*Buteo swainsoni*), Northern Harrier (*Circus cyaneus*), Burrowing Owl (*Athene cunicularia*), Prairie Falcon (*Falco mexicanus*), American White Pelican (*Pelecanus erythrorhynchos*), Tricolored Blackbird (*Agelaius tricolor*), western pond turtle (*Clemmys marmorata*), giant garter snake (*Thamnophis gigas*), silvery legless lizard (*Anniella pulchra pulchra*), delta button-celery (*Eryngyum racemosum*), hispid bird's-beak (*Cordylanthus mollis ssp. Hispidus*), Sanford's arrowhead (*Sagittaria sanfordii*), San Joaquin saltbush (*Atriplex joaquiniana*), heartscale (*Atriplex cordulata*), and brittlescale (*Atriplex depressa*).

15. Eastside Bypass near El Nido

Station Number: B00435
Location: UTM Coordinates: E712705 N4113806 Zone 10 NAD27
Township 09S/Range 12E-Section 13

Activities occurring once every five years to several times a year.	Activities conducted less than once every five years. Scheduled to occur within the next year.	Activities conducted less than once every five years but may occur within the next five years.
1. Flush can 2. Clean inside of house 3. Paint can/house 4. Change float 5. Run levels	1. Pole replacement	1. Pole replacement

Description:

This station is located on the left bank, approximately 2.8 miles north of Washington Road and 6.4 miles west of El Nido, in Merced County. This station is accompanied by a set of poles that are used to moor a boat while taking flow measurements during high flows. There are eighteen 10 inch poles that are approximately 8 to 10 feet high, spaced across the channel approximately 50 - 75 feet apart.

This station was erected in 1964 and was replaced by DWR during the Eastside bypass levee-raising project.

The average range of flows for this station is from zero to 24,000 cfs. The average annual flow is 75 cfs.

The streambed and surrounding substrate are Columbia soils, channeled (USDA-SCS, July 1962).

Vegetation in this area is herbaceous and emergent marsh. Plant species present include; various grasses and forbs, and rush (*Juncus sp.*). The surrounding land use is grazing.

The following species may potentially be found: Kern brook lamprey (*Lampetra hubbsi*), San Joaquin roach (*Lavinia symmetricus spp.1*), hardhead (*Mylopharadon conocephalus*), Sacramento splittail (*Pogonichthys macrolepidotus*), molestan blister beetle (*Lytta molesta*),

pallid bat (*Antrozous pallidus*), Townsend's western big-eared bat (*Plecotus townsendii townsendii*), Yuma myotis (*Myotis yumanensis*), San Joaquin kit fox (*Vulpes macrotis mutica*), San Joaquin pocket mouse (*Perognathus inornatus*), Merced kangaroo rat (*Dipodomys heermanni dixoni*), Greater Sandhill Crane (*Grus canadensis tabida*), American White Pelican (*Pelecanus erythrorhynchos*), Bald Eagle (*Haliaeetus leucocephalus*), Swainson's Hawk (*Buteo swainsoni*), Northern Harrier (*Circus cyaneus*), Burrowing Owl (*Athene cunicularia*), Prairie Falcon (*Falco mexicanus*), American Peregrine Falcon (*Falcos peregrinus anatum*), western pond turtle (*Clemmys marmorata*), giant garter snake (*Thamnophis gigas*), silvery legless lizard (*Anniella pulchra pulchra*), hispid bird's-beak (*Cordylanthus mollis ssp. Hispidus*), Sanford's arrowhead (*Sagittaria sanfordii*), San Joaquin saltbush (*Atriplex joaquiniana*), heartscale (*Atriplex cordulata*), brittlescale (*Atriplex depressa*), and lesser saltscale (*Atriplex minuscula*).

MADERA COUNTY

16. Fresno River Lewis Fork Near Oakhurst

Station Number: B67325
Location: UTM Coordinates: E266292 N4136207 Zone 11 NAD27
Township 07S/Range21E-Section02

Activities occurring once every five years to several times a year.	Activities conducted less than once every five years. Scheduled to occur within the next year.	Activities conducted less than once every five years but may occur within the next five years.
1. Flush can 2. Clean inside of house 3. Paint can/house 4. Re-mark bridge 5. Change float 6. Run levels	1. Removal of stream gage component	

Description:

This gage is located in Madera County between river miles 66 and 67, east of Freeway 41 and approximately 1.7 miles downstream from the Bass Lake Road Bridge. This station is located on the left bank and is accompanied by a cableway structure. The cable height is approximately 15 feet above the ordinary high water mark.

This station was erected in 1961. The cableway is scheduled to be removed at this site as measurements are now taken from a nearby bridge.

The average range of flows for this station is from zero to 1200 cfs. The average annual flow is 15 cfs.

The streambed and surrounding substrate is a mixture of Ahwahnee and Auberry coarse sandy loams (USDA-SCS, March 1991).

Vegetation at this site most closely resembles White Alder Riparian Forest as described by Holland (1986). Plant species present include; white alder (*Alnus rhombifolia*), black locust (*Robinia psuedoacacia*), rush (*Juncus spp.*), blackberry (*Rubus spp.*), blue oak (*Quercus douglasii*), interior live oak (*Quercus wislizenii*), valley oak (*Quercus lobata*), California foothill

pine (*Pinus Sabiniana*), and ponderosa pine (*Pinus ponderosa*). Land use in the surrounding area is residential.

The following species may potentially be found: San Joaquin roach (*Lavinia symmetricus spp.1*), hardhead (*Mylopharadon conocephalus*), valley elderberry longhorn beetle (*Desmocerus californicus dimorphus*), molestan blister beetle (*Lytta molesta*), Sierra pygmy grasshopper (*Tetrix sierrana*), pallid bat (*Antrozous pallidus*), Townsend's western big-eared bat (*Plecotus townsendii townsendii*), Yuma myotis (*Myotis yumanensis*), Prairie Falcon (*Falco mexicanus*), foothill yellow-legged frog (*Rana boylii*), flaming trumpet (*Collomia rawsoniana*), Madera linanthus (*Linanthus serrulatus*), and Mariposa pussypaws (*Calyptridium pulchellum*).

ENVIRONMENTAL CHECKLIST

1. Project Title: **Stream Gaging Station Maintenance Project**

2. Lead agency name and address: California Department of Water Resources, 3374 East Shields Avenue, Fresno, California, 93726

3. Contact person and phone number: Gerald Hatler (559) 230-3325

4. Project location: In the San Joaquin Valley, California; on the banks of the San Joaquin, Stanislaus, Tuolumne, Fresno, and Merced Rivers, and on Bear, and Orestimba Creeks, and Salt Slough.

5. Project sponsor's name and address: California Department of Water Resources, San Joaquin District, 3374 East Shields Avenue, Fresno, California, 93726.

6. General plan designation: River Influence Area

7. Zoning: Open Space/Open Conservation

8. Description of project: Numerous stream gaging stations have been installed along rivers, creeks, and sloughs in the San Joaquin Valley to enable the California Department of Water Resources (DWR) to monitor and catalog annual flows and water quality for the area. This project would allow DWR Surface and Ground Water Data Unit personnel to conduct periodic maintenance activities required to ensure ongoing collection of accurate stream flow data.

9. Surrounding land uses and setting: DWR stream gaging stations are located on the banks of rivers, creeks, and sloughs. Uses vary by stream but may include recreational activities such as fishing and boating, and/or commercial activities such as gravel extraction. The predominant land use in the floodplain adjacent to each river is agriculture, with a mix of orchards, row crops, cattle grazing, and some urban/residential.

10. Other public agencies whose approval may be required:
California Department of Fish and Game
California Reclamation Board
Sate of California Regional Water Quality Control Board
National Marine Fisheries Service
U.S. Army Corps of Engineers
U.S. Fish and Wildlife Service

ENVIRONMENTAL FACTORS POTENTIALLY AFFECTED:

The environmental factors checked below would be potentially affected by this project, involving at least one impact that is a “Potentially Significant Impact” as indicated by the checklist on the following pages.

	Land Use and Planning	x	Transportation/Circulation	x	Public Services
	Population and Housing	x	Biological Resources		Utilities & Service Systems
x	Geological Problems		Energy & Mineral Resources		Aesthetics
x	Water	x	Hazards		Cultural Resources
	Air Quality		Noise		
			Mandatory Findings of Significance		Recreation

DETERMINATION: (To be completed by the Lead Agency) On the basis of this initial evaluation:

	I find that the proposed project COULD NOT have a significant effect on the environment, and a NEGATIVE DECLARATION will be prepared
x	I find that although the proposed project could have a significant effect on the environment, there will not be a significant effect in this case because the mitigation measures described on an attached sheet have been added to the project. A MITIGATED NEGATIVE DECLARATION will be prepared.
	I find that the proposed project MAY have a significant effect on the environment, and an ENVIRONMENTAL IMPACT REPORT is required.
	I find that the proposed project MAY have a significant effect(s) on the environment, but at least one effect 1) has been adequately analyzed in an earlier document pursuant to applicable legal standards, and 2) has been addressed by mitigation measures based on the earlier analysis as described on attached sheets, if the effect is a "potentially significant impact" or "potentially significant unless mitigated". An ENVIRONMENTAL IMPACT REPORT is required, but it must analyze only the effects that remain to be addressed.

Signature:_____ Date:_____

Printed name: Paula J. Landis

ENVIRONMENTAL IMPACTS:	Potentially Significant Impact	Potentially Significant Unless Mitigated	Less Than Significant Impact	No Impact
I. Land Use and Planning. Would the proposal:				
a. Conflict with general plan designation or zoning?				x
b. Conflict with applicable environmental plans or policies adopted by agencies with jurisdiction over the project?				x
c. Be incompatible with existing land use in the vicinity?				x
d. Affect agricultural resources or operations (e.g. impacts to soils or farmlands or incompatible uses)?				x
e. Disrupt or divide the physical arrangement of an established community?				x
II. Population and Housing. Would the proposal:				
a. Cumulatively exceed official regional or local population projections?				x
b. Induce substantial growth in an area either directly or indirectly?				x
c. Displace existing housing, especially affordable housing?				x
III. Geologic Problems. Would the proposal result in or expose people to potential impacts involving:				
a. Fault rupture?				x
b. Seismic ground shaking?				x
c. Seismic ground failure, including liquefaction?				x
d. Seiche, tsunami, or volcanic hazard?				x
e. Landslides or mudflows?				x
f. Erosion, changes in topography or unstable soil conditions from excavation, grading, or fill		x		
g. Subsidence of land?				x
h. Expansive soils?				x
I. Unique geologic or physical features?				x
IV. Water. Would the proposal result in:				
a. Changes in absorption rates, drainage patterns, or the rate and amount of surface runoff?			x	
b. Exposure of people or property to water related hazards such as flooding?				x

ENVIRONMENTAL IMPACTS:	Potentially Significant Impact	Potentially Significant Unless Mitigated	Less Than Significant Impact	No Impact
c Discharge into surface waters or other alteration of surface water quality (e.g. temperature, turbidity)		x		
d. Changes in the amount of surface water in any water body?				x
e. Changes in currents, or the course or direction of water movement?				x
f. Change in the quantity of ground waters, either through direct additions or withdrawals, or through interception of an aquifer by cuts or excavations or through substantial loss of groundwater recharge capability?				x
g. Altered direction or rate of flow of groundwater?				x
h. Impacts to groundwater quality?				x
I. Substantial reduction in the amount of groundwater otherwise available for public water supplies?				x
V. Air Quality. Would the proposal:				
a. Violate any air quality standard or contribute to an existing or projected air quality violation?			x	
b. Expose sensitive receptors to pollutants?				x
c. Alter air movement, moisture, or temperature, or cause any change in climate?				x
d. Create objectionable odors?				x
VI. Transportation/Circulation. Would the proposal result in:				
a. Increased vehicle trips or traffic congestion?		x		
b. Hazards to safety from design features (e.g. sharp curves) or incompatible uses (e.g. farm equipment)?				x
c. Inadequate emergency access or access to nearby uses?				x
d. Insufficient parking capacity onsite or offsite?				x
e. Hazards or barriers for pedestrians or bicyclists?		x		

ENVIRONMENTAL IMPACTS:	Potentially Significant Impact	Potentially Significant Unless Mitigated	Less Than Significant Impact	No Impact
f. Conflicts with adopted policies supporting alternative transportation (e.g. bus turnouts, bicycle racks)?				x
g. Rail, waterborne or air traffic impacts?				x
VII. Biological Resources. Would the proposal result in impacts to:				
a. Endangered, threatened or rare species or their habitats (including but not limited to plants, fish, insects, animals, and birds)?		x		
b. Locally designated species (e.g. heritage trees)?				x
c. Locally designated natural communities (e.g. oak forest, coastal habitat, etc)?				x
d. Wetland habitat (e.g. marsh, riparian, vernal pool)?		x		
e. Wildlife dispersal or migration corridors?		x		
VIII. Energy and Mineral Resources. Would the proposal:				
a. Conflict with adopted energy conservation plans?				x
b. Use nonrenewable resources in a wasteful and inefficient manner?				x
c. Result in the loss of availability of known mineral resources that would be of future value to the region and the residents of the State?				x
IX. Hazards. Would the proposal involve:				
a. A risk of accidental explosion or release of hazardous substances (including, but not limited to, oil, pesticides, chemicals, or radiation)?		x		
b. Possible interference with an emergency response plan or emergency evacuation plan?				x
c. The creation of any health hazard or potential health hazard?				x
d. Exposure of people to existing sources of potential health hazards?				x
e. Increased fire hazard in areas with flammable brush, grass or trees?		x		
X. Noise. Would the proposal result in:				
a. Increases in existing noise levels?				x
b. Exposure of people to severe noise levels?				x

ENVIRONMENTAL IMPACTS:	Potentially Significant Impact	Potentially Significant Unless Mitigated	Less Than Significant Impact	No Impact
XI. Public Services. Would the proposal have an effect upon, or result in a need for new or altered government services in any of the following areas:				
a. Fire protection?		x		
b. Police protection?				x
c. Schools?				x
d. Maintenance of public facilities, including roads?				x
e. Other government services?				x
XII. Utilities and Service Systems. Would the proposal result in a need for new systems or supplies, or substantial alterations to the following utilities?				
a. Power or natural gas?				x
b. Communications systems?				x
c. Local/regional water treatment or distribution facilities?				x
d. Sewer or septic tanks?				x
e. Storm water drainage?				x
f. Solid waste disposal?				x
g. Local/regional water supplies?				x
XIII. Aesthetics/Scenic Resources. Would the proposal:				
a. Affect a scenic vista or scenic highway?				x
b. have a demonstrable negative aesthetic effect?				x
c. Create light or glare?				x
XIV. Cultural Resources. Would the proposal:				
a. Disturb paleontological resources?				x
b. Disturb archaeological resources?				x
c. Disturb historic resources?				x
d. Have the potential to cause a physical change that would affect unique ethnic cultural values?				x
e. Restrict existing religious or sacred uses within the potential impact area?				x
XV. Recreation. Would the proposal:				
a. Increase the demand for neighborhood or regional parks or other recreational facilities?				x
b. Affect existing recreational opportunities?				x
XVI. Mandatory Findings of Significance.				
a. Does the project have the potential to degrade the quality of the environment, substantially reduce the habitat of a fish or wildlife species, cause a fish or wildlife				x

ENVIRONMENTAL IMPACTS:	Potentially Significant Impact	Potentially Significant Unless Mitigated	Less Than Significant Impact	No Impact
populations to drop below self-sustaining levels, threaten to eliminate a plant or animal community, reduce the number or restrict the range of a rare or endangered plant or animal or eliminate important examples of the major periods of California history or prehistory?				x
b. Does the project have the potential to achieve short-term, to the disadvantage of long-term, environmental goals?				x
c. Does the project have impacts that are individually limited, but cumulatively considerable? ("Cumulatively considerable" means that the incremental effects of a project are considerable when viewed in connection with the effects of past projects, the effects of other current projects, and the effects of probable future projects)				x
d. Does the project have environmental effects that will cause substantial adverse effects on human beings, either directly or indirectly?				x

ENVIRONMENTAL CHECKLIST DISCUSSION

The following information further explains some of the Environmental Checklist items. Items that are self-explanatory or not applicable to this project are not included in this discussion.

I. Land Use and Planning

Gaging stations are located in and adjacent to rivers, creeks, and sloughs. They occupy a small area and maintenance of these structures will not conflict with agriculture or other existing land uses.

II. Population and Housing

Gaging stations are located in and adjacent to rivers, creeks, and sloughs. They occupy a small area and maintenance of these structures will not impact population or housing.

III. Geologic Problems

When excavation occurs, erosion, changes in topography, or unstable soil conditions could result. Potential impacts will be reduced to less than significant by limiting the area of earth disturbance, excavating only the necessary amount of soil, recompacting the soil to specified standards, and by returning the site to the original topography, to the maximum extent practicable. Potential impacts involving erosion could also occur at sites requiring mowing or other vegetation control. To reduce any impacts to less than significant, vegetation will be mowed to a height that prevents exposure of bare soil, and woody vegetation will be pruned rather than removed, whenever possible. In instances when woody vegetation must be removed, no plant material will be disturbed beneath the soil surface, thus leaving the root mass, and surrounding soil, intact.

IV. Water

a. Because any changes in topography or vegetation will be limited to the specific project site, and the project involves maintenance of existing structures, any change in absorption rates, drainage, or the rate and amount of surface runoff will be less than significant.

c. Activities involving can flushing, gage replacement, and excavation in or adjacent to the stream could result in a potentially significant increase in turbidity. Impacts will be minimized to less than significant levels by limiting the area of earth disturbance, by excavating only the amount of soil necessary, and by stockpiling excavated material away from the stream channel. Heavy equipment will be kept out of the channel during construction, and earthwork will be done by hand whenever possible. To minimize any potential salmonid spawning impacts to less than significant levels, all activities involving excavation in or adjacent to the stream will be prohibited between October 1 and January 1.

When can flushing is necessary, the maximum amount of material discharged into the stream would be 4 cubic feet. Preliminary sampling results indicate that, depending on stream conditions, the resulting increase in turbidity downstream of and at the gage, returns to near background levels within 40 minutes after can flushing is complete. Increased turbidity could potentially cause short term impacts. Any potential salmonid spawning impacts will be minimized to less than significant levels by prohibiting can flushing activities from October 1 through January 1.

V. Air Quality

The three project area counties, Stanislaus, Merced, and Madera are part of the San Joaquin Valley Air Basin. Although the air basin is non-attainment for ozone and PM-10, because most project activities do not require use of heavy equipment, and when heavy equipment is necessary, duration of use is expected to last no more than one day, the project will have a less than significant impact on air quality.

VI. Transportation/Circulation

Because project activities don't require the use of vehicles in ways that would impair traffic movement, and DWR implements appropriate safety procedures when making repairs or taking measurements from highway bridges, including use of safety vests, flagging and signs, any potential project related transportation or circulation impacts will be less than significant.

VII. Biological Resources

By implementing the measures listed in the avoidance and mitigation section (page 58), any potential biological resource impacts including any listed species and their habitats, riparian areas, and wildlife corridors, will be reduced to less than significant levels.

VIII. Energy and Mineral Resources

The project involves maintenance, or replacement of existing structures. Minimal equipment will be used during each project activity, and the activities are short term in duration. Any excavation will be minimal, and will be done on site. No material will be imported or exported during the project. The project will not impact will not impact energy or mineral resources.

IX. Hazards

a. Potential release of any hazardous substances will be reduced to less than significant levels by properly maintaining all equipment, by prohibiting in-channel use of heavy equipment, and by implementing best management and clean-up practices during use of all chemicals.

e. During times of the year when fire hazard is high, several project activities could increase the likelihood of fire. To minimize this, all DWR stream gage personnel will be

familiar with Fire Hazards Responsibilities, Prevention, and Control (DWR, 2002) and will have the tools and knowledge necessary to comply with State of California laws and procedures concerning fire prevention and control. By implementing prevention and control measures, potential project related fire hazards will be reduced to less than significant levels.

X. Noise

An increase in noise would only result during activities requiring power tools or heavy equipment. Because the project sites are generally located in agricultural and rural areas, and because use of equipment would be minimal, no noise related impacts are anticipated.

XI. Public Services

Should a project activity result in increased fire hazard, assistance from a fire protection agency may be necessary. To minimize the likelihood of this occurring, all DWR stream gage personnel will be familiar with Fire Hazards Responsibilities, Prevention, and Control (DWR, 2002) and will have the tools and knowledge necessary to comply with State of California laws and procedures concerning fire prevention and control. By implementing prevention and control measures, potential impacts to fire protection public services will be reduced to less than significant levels.

XII. Utilities and Service Systems.

The project involves maintenance, or replacement of existing structures. Minimal equipment will be used during each project activity, and the activities are short term in duration. Any excavation will be minimal, and will be done on site. No material will be imported or exported during the project. The project will not impact will not impact energy or mineral resources.

XIII. Aesthetics/Scenic Resources.

Because all project activities involve the maintenance or replacement of existing facilities, the activities will entail minimal vegetation removal, to the maximum extent practicable, and will be short term in duration, no aesthetic impacts are anticipated.

XIV. Cultural Resources.

The project involves maintenance or replacement of existing facilities, project activities will be limited to the project site, and each site encompasses a small area. No cultural resources will be impacted.

XV. Recreation.

Although the 16 gages are spread over more than 200 miles of watercourse within the San Joaquin River Drainage, because the project entails maintaining or replacing existing facilities, the facilities are sited in locations that don't interfere with recreational opportunities, and because

project activities require little, if any, heavy equipment and are short term in duration, no project-related impacts to recreation are expected.

XVI. Mandatory Findings of Significance.

Because the 16 stations in the project area are spread over more than 200 miles of watercourse with an average distance of 18 miles between stations, the project sites are limited to areas localized around the gage, and because the activities are scheduled to occur at varying times, no cumulative impacts are expected.

AVOIDANCE AND MITIGATION MEASURES

GEOLOGIC PROBLEMS:

When excavation occurs, erosion, changes in topography, or unstable soil conditions could result. Potential impacts will be reduced to less than significant by limiting the area of earth disturbance, excavating only the necessary amount of soil, recompacting the soil to specified standards, and by returning the site to the original topography, to the maximum extent practicable. Potential impacts involving erosion could also occur at sites requiring mowing or other vegetation control. To reduce any impacts to less than significant, vegetation will be mowed to a height that prevents exposure of bare soil, and woody vegetation will be pruned rather than removed, whenever possible. In instances when woody vegetation must be removed, no plant material will be disturbed beneath the soil surface, thus leaving the root mass, and surrounding soil, intact.

WATER:

Activities involving can flushing, gage replacement, and excavation in or adjacent to the stream could result in a potentially significant increase in turbidity. Impacts will be minimized to less than significant levels by limiting the area of earth disturbance, by excavating only the amount of soil necessary, and by stockpiling excavated material away from the stream channel. Heavy equipment will be kept out of the channel during construction, and earthwork will be done by hand whenever possible.

When can flushing is necessary, the maximum amount of material discharged into the stream is estimated to be a maximum of 4 cubic feet. Preliminary sampling results indicate that, depending on stream conditions, the resulting increase in turbidity downstream of and at the gage. returns to near background levels within 40 minutes after can flushing is complete. Increased turbidity could potentially cause short term impacts.

TRANSPORTATION/CIRCULATION:

Many stream gages exist near improved roadways and are often attached to bridges. In cases where a cableway does not exist or flow measurements are not taken from a boat, a nearby bridge is used to take measurements. All vehicles used by stream gage personnel will be parked on the shoulder or completely off the roadway. All equipment and materials will be kept out of the roadway. When vehicles, equipment and materials must be placed on the shoulder or next to the roadway, appropriate tripod-mounted hazard signs will be placed next to the roadway in plain sight of oncoming traffic coming from both directions. Pylons will be placed adjacent to vehicles, equipment, and materials and personnel working near the roadway will wear appropriate safety vests. If any work must occur in the roadway or presents a significant impediment to the normal flow of traffic, an encroachment permit will be obtained from the California Department of Transportation and from county and local authorities, before any work is performed.

BIOLOGICAL RESOURCES:

An environmental awareness training program will be implemented to familiarize DWR employees and contractors with regulatory requirements and potential environmental concerns associated with gaging station maintenance and replacement. This program will include identification of sensitive resources and will discuss ways to avoid impacts to these resources without significantly disrupting operation and maintenance of DWR stream gages.

A qualified biologist will conduct a site-specific survey within 30 days prior to the implementation of maintenance activities. The biologist will identify potentially significant impacts, and will determine whether additional measures or permits are needed. Once all environmental concerns have been resolved, the biologist will prepare an Environmental Clearance describing the authorized work and any conditions that may apply including the time frame in which the work is to be completed. The following mitigation measures will be incorporated to reduce these impacts to less than significant.

Habitat:

Potential impacts to habitat will be reduced to less than significant by limiting the area of earth disturbance, excavating only the necessary amount of soil, returning the site to the original topography to the maximum extent practicable, mowing vegetation to a height that prevents exposure of bare soil, pruning rather than removing woody vegetation, keeping heavy equipment out of the channel during construction, and conducting earthwork by hand whenever possible.

Mammals:

San Joaquin kit fox *(Vulpes macrotis mutica)*
San Joaquin valley floor saltbush scrub, valley sink scrub, valley and foothill grasslands, and agricultural lands adjacent to these habitats are considered potential kit fox habitat and should be surveyed and/or avoided.

Den sites for shelter and reproduction are found in areas with both friable and hard clay soils and may occur in flat terrain, hills, and roadside berms. Den sites often occur in areas alongside ground squirrel and badger dens. Kit fox may inhabit squirrel holes, vacant badger dens, and artificial structures such as culverts, pipes, and rubble piles. All potential den sites will be inspected before any work is conducted.

In areas where kit fox are known or have the potential to exist, surveys for dens and other signs of kit fox such as scat, prey remains, and tracks, will occur within 30 days before maintenance activities begin. A qualified biologist will follow "U.S. Fish and Wildlife Service Standardized Recommendations for Protection of the San Joaquin Kit Fox Prior to or During Ground Disturbance" (FWS, 1999). If any evidence of kit fox activity is found, the FWS will be consulted.

When maintenance activities occur, to the extent practicable, surface disturbance will be confined to areas that provide low quality kit fox habitat. A qualified biologist will establish a buffer zone, not less than 100 feet around known kit fox dens, demarcated by fencing that allows access by kit fox. Buffer zones of 50 feet will be established around potential dens that do not contain evidence of kit fox use and will be demarcated by flagged stakes. To avoid inadvertent entrapment of animals during construction, all excavated, steep-walled holes or trenches that are more than two feet deep will be covered at the close of each working day with plywood or similar materials, or will be fitted with one or more 2:1 slope escape ramps constructed of earth fill or wooden planks. All construction pipes, culverts, or similar structures with a diameter of four inches or greater that are stored at a construction site overnight will be inspected for kit foxes before the pipe is moved or used.

Because kit fox are nocturnal, maintenance work will not be conducted between sunset and sunrise in areas within one-half mile of potential habitat. No pets shall be allowed on the project site. On unposted roads, vehicle speeds shall not exceed 20 miles per hour in the project area, except on county roads and State and federal highways. Trash shall be disposed of properly and removed daily. Environmental awareness training will be conducted for all projects located in areas that provide potential habitat for this species.

Riparian brush rabbit *(Sylvilagus bachmani riparius)*
Riparian woodrat *(Neotoma fuscipes riparia)*
Riparian brush rabbits and woodrats were historically found in riparian forest and shrubland communities along the lower portions of the San Joaquin and Stanislaus rivers in the northern San Joaquin Valley. Currently, the only known population for each species is in Caswell Memorial State Park in San Joaquin County. Suitable habitat may occur in Merced, Stanislaus, and San Joaquin counties. Preferred habitat of the riparian brush rabbit and woodrat is composed of a dense understory shrub layer. This layer often consists of wild rose, blackberries, wild grape, coyote bush and grasses. Typically, there are very few willows in the understory and canopy.

Habitat associations will be surveyed and avoided to the greatest extent possible. If disturbance to potential habitat is unavoidable, a qualified biologist will be on site to supervise the maintenance activities. Sensitive areas will be demarcated with flagging. No work shall be conducted between sunset and sunrise. On unposted roads, vehicle speeds shall not exceed 20 miles per hour in the project area, except on county roads and State and federal highways. No pets shall be allowed on the project site. Trash shall be disposed of properly, and removed daily. Environmental Awareness Training will be conducted for all projects located in areas that provide potential habitat for these species.

Merced kangaroo rat *(Dipodomys heermanni dixoni*
San Joaquin pocket mouse *(Perognathus inornatus inornatus)*
Habitat associations and areas that should be surveyed and/or avoided include annual grasslands, chenopod scrub, mixed montane chaparral, and early successional stages (sparse to open canopy) of the San Joaquin Valley foothills, hardwood and valley foothill hardwood conifer areas. These species prefer fine, deep, friable soils.

Before any ground disturbing activities commence, a qualified biologist will survey for the presence of the plant associations that are considered habitat. The biologist will also survey for tracks, scat, burrow systems, haystacks, areas of clipped vegetation, and other kangaroo rat and pocket mouse sign. If disturbance of burrows is unavoidable, a qualified biologist will conduct surveys in the area to ensure proper identification and determine the extent of habitat utilization.

Where possible, surface disturbance will be confined to areas that do not exhibit the signs listed above. For inhabited areas, a buffer zone of no less that 200 feet will be established, then demarcated with flagging. No work shall be conducted between sunset and sunrise. No pets shall be allowed on the project site. Trash shall be disposed of properly, and removed daily. In the event either of these species are seen, FWS and DFG will be consulted. Environmental Awareness Training will be conducted for all projects located in areas that provide potential habitat for these species.

Bats

Specific habitat requirements for sensitive bat species vary but bat species are widely distributed in the State. Habitat associations and areas that should be surveyed and/or avoided include open forests and woodlands near water, grasslands, and shrublands. However, some species prefer dense forests or exist in arid regions. Bats commonly roost in buildings, mines, caves and crevices and often use night roosts that are more open. Hibernacula and maternity roosts exist, and bats may move to warmer and/or colder surroundings for protection from extremes depending on the season and level of activity. In areas where bats may occur, a qualified biologist will survey for the presence of associated habitat types and inhabitable structures for bat species of concern. Environmental awareness training shall be conducted for all projects located in areas that provide potential habitat for these species. Activities will avoid disturbance of roosts during the months of May through August while young are non-volant and during what is, typically, a period of late gestation.

Birds:

Swainson's Hawk *(Buteo swainsoni)*

Habitat associations and areas that should be surveyed and/or avoided include trees along the edge of riparian systems and lone trees or groves of trees in agricultural fields adjacent to riparian systems. A qualified biologist will conduct a survey to assess the quality of the habitat and determine the presence or absence of nests in the area. If a Swainson's hawk nest is located within the project area, a 50-foot buffer will be established around the nest site and activities will be restricted to the cool hours of the morning. A qualified biologist will be on site to monitor the nest during all maintenance activities. Vegetation removal will be prohibited around a Swainson's hawk nesting site.

White-tailed Kite *(Elanus leucurus)*

Habitat associations and areas that should be surveyed and/or avoided include cismontane valley lowlands near agricultural fields. Dense tree canopies are used for cover and nests are commonly found near the top of dense oak or willow stands, usually 20-100 feet above ground. Foraging areas include open grasslands, meadows, emergent wetlands, and agricultural land

(DFG, 1990a). If an active nest is present within the project area, all work will be conducted outside of the peak breeding season, from May through August.

Bald Eagle *(Haliaeetus leucocephalus)*
Habitat associations and areas that should be surveyed and/or avoided include nests in multi-storied stands of trees near bodies of water. Nest trees in California are typically mature, large ponderosa or sugar pines between 41 to 46 inches in diameter. Surveys will be conducted in any suitable nesting habitat. Nest surveys will be conducted after mid-April by a qualified biologist. If there are any bald eagle nests within 0.5 miles of the project, activity will be restricted from January 1 through August 31 and from November 15 through March 15. The project will avoid removal of any mature trees or snags over 20" diameter at breast height (DBH) along watercourses.

American Peregrine Falcon *(Falco peregrinus anatum)*
Habitat associations and areas that should be surveyed and/or avoided include open areas associated with cliffs. If potential habitat is present within the project site, a qualified biologist will conduct a survey to assess the quality of the habitat and determine presence or absence of nests in the area. If a nest is located within the project area, a 50-foot buffer will be established around the nest site with flagging. Vegetation removal is prohibited at project sites where Peregrine Falcons are nesting.

Greater Sandhill Crane *(Grus canadensis tabida)*
Habitat associations and areas that should be surveyed and/or avoided include meadows, marshes, emergent wetlands, and moist croplands preferring to feed in shortgrass plains, open wetland, and grain fields. Migrating populations pass through the State from September through April (DFG, 1990a). If habitat is actively used within the project area, activities will be conducted from May through August. Maintenance activities will be short in duration, minimizing disturbance.

Western Yellow-billed Cuckoo *(Coccyzus americanus occidentalis)*
Habitat associations and areas that should be surveyed and/or avoided include valley foothill and desert riparian areas with dense thickets or forested areas with low-level understory foliage. Willows are dominant in preferred habitats. The Western Yellow-billed Cuckoo moves through the State from June through early September. Nests are flimsy, forming a cup of twigs between 2-25 feet in densely foliaged deciduous trees and shrubs, preferring willows (DFG, 1990a). If they are found in or near the project site, activity will be conducted outside the months from June through September.

Tricolored Blackbird *(Agelaius tricolor)*
Habitat associations and areas that should be surveyed and/or avoided include emergent marsh with tall, dense cattails or tules, thickets of willow, blackberry, wild rose, and tall herbs. Foraging occurs in grassland and cropland habitats. Nesting may occur between late March and late July. If Tricolored Blackbirds are nesting within the project area, the FWS and DFG will be consulted to establish appropriate mitigation. Seasonal restrictions on project activities may be appropriate.

Burrowing Owl *(Athene cunicularia)*
Habitat associations and areas that should be surveyed and/or avoided include annual and perennial grasslands, deserts, and arid scrublands characterized by low-growing vegetation. Suitable habitat may also include trees and shrubs if the canopy covers less than 30 percent of the ground surface. Both natural and artificial burrows provide protection, shelter, and nest sites. Burrows are typically made by fossorial mammals such as ground squirrels or badgers, but Burrowing owls may also use man-made structures such as concrete culverts, asphalt, wood debris piles, or openings beneath concrete or asphalt pavement. If presence is determined, DFG will be contacted for the appropriate mitigation measures.

Northern Harrier *(Circus cyaneus)*
Habitat associations and areas that should be surveyed and/or avoided include marshes, fields, and prairies. If a nest is located within the project area, a 50-foot buffer will be established around the nest site. Vegetation removal is prohibited near an occupied nest.

Prarie Falcon *(Falco mexicanus)*
Habitat associations and areas that should be surveyed and/or avoided include mountainous grasslands, open hills, plains, and prairies. If a nest is located within the project area, a 50-foot buffer will be established around the nest site. Vegetation removal is prohibited near an occupied nest.

Amphibians:

California red-legged frog (*Rana aurora draytonii*)
Habitat associations and areas that should be surveyed and/or avoided include creeks, ponds and marshes, often with cattails, tule, and willows, and uplands adjacent to wetland habitats. A qualified biologist will follow, "Guidance on Site Assessment and Field Surveys for California Red-legged Frogs" before work begins (FWS, 1997). Placement of gravel or other materials into red-legged frog habitat will be done gradually from the water's edge out into the stream or pond to allow frogs to escape. If red-legged frogs are found, and habitat may be affected, the FWS will be consulted.

In places where red-legged frog are present, project activities will be completed between April 1 and November 1. Best management practices to control erosion will be implemented. If a work site is to be temporarily dewatered by pumping, intakes will be completely screened with wire mesh not larger than 5mm to prevent adults, tadpoles, and subadults from entering the pump. Water will be released or pumped downstream of the work site at an appropriate rate to match instream flows. Upon completion of construction activities, any barriers to flow shall be removed in a manner that will allow flow to resume with the least disturbance to the substrate.

Foothill yellow-legged frog *(Rana boylii)*
Habitat associations and areas that will be surveyed and/or avoided include rocky streams in valley-foothill hardwood, valley-foothill hardwood conifer, valley-foothill riparian, ponderosa pine, mixed conifer, mixed chaparral, and wet meadow habitats. They remain near permanent water and breed after spring flooding, usually between March and May (DFG, 1988). Activities will not be conducted outside the period from March 1 through June 30 in areas where they are known to be present.

Reptiles:

Giant garter snake *(Thamnophis gigas)*
Habitat associations and areas that will be surveyed and/or avoided include marshes, sloughs, ponds, low gradient streams, irrigation canals, drainage canals, and rice fields. Surveys and construction activities will follow guidelines outlined in, "Draft Recovery Plan for the Giant Garter Snake" when giant garter snake presence is suspected (FWS, 1999b). If giant garter snake is found within the project site, the FWS will be consulted.

Construction and vegetation removal in garter snake habitat is restricted from April 15 through October 31. Vegetation removal will leave 8-10 inches of stubble within range of known giant garter snakes. Any grading, excavation, or filling within 30 feet of giant garter snake habitat outside this period will require consultation with the DFG.

Western pond turtle *(Clemmys marmorata)*
Habitat associations and areas that should be surveyed and/or avoided include ponds, marshes, streams, rivers, and irrigation ditches that typically have a rocky or muddy bottom and support watercress, cattails, water lilies, or other aquatic vegetation. They may also be found in woodland, grassland, and open forest. If western pond turtles are present in the project area, no maintenance work will occur between the months of April through August to avoid disrupting reproduction and nests.

Silvery legless lizard *(Anniella pulchra pulchra)*
Habitat associations and areas that should be surveyed and/or avoided include valley-foothill and chaparral habitats. They are secretive and fossorial and can be found at the base of shrubs, in leaf-litter or beneath surface objects. Reproduction begins in late-spring or early-summer with the young being born in the fall. They are typically active year round with the exception of hibernating during cold extremes (DFG, 1988). If surveys reveal their presence, work will be restricted from May through November.

San Joaquin whipsnake *(Masticophis lateralis euryxanthus)*
Habitat associations and areas that should be surveyed and/or avoided include mixed chaparral, valley-foothill hardwood, valley-foothill conifer, and valley-foothill riparian. They forage on the ground surface and may climb shrubs and small trees and will seek cover under surface objects and crevices. They are most active from March through November, restricting activity during cold periods (DFG, 1988). Activities will be conducted outside this period in areas where they are known to be present.

Fish:

Central Valley Chinook salmon *(Oncorhynchus tshawytscha)*
Central Valley steelhead *(Oncorhynchus mykiss)*
In-channel and excavation activities will be scheduled outside the spawning and incubation period, and when the juvenile and adult stages of the Central Valley steelhead and fall-run Chinook are low in abundance. Times of lowest abundance usually correspond to adult in-migrations and juvenile out-migrations. Maintenance activities occurring between July and September are likely to have the least potential for impacts to salmon populations. Riparian vegetation providing shaded riverine aquatic habitat will be protected during construction and if removal of it is unavoidable, the loss will be mitigated by replacement of riparian vegetation.

Kern brook lamprey *(Lampetra hubbsi)*
Habitat associations and areas that should be surveyed and/or avoided are primarily mud and backwater riparian areas. Spawning occurs between April and July at temperatures around 15°C in swift moving riffles. In-channel and excavation activities will be conducted outside the months of April through July in areas where they are known to be present.

Hardhead *(Mylopharodon conocephalus)*
Habitat associations and areas that should be surveyed and/or avoided are rivers throughout the Sacramento-San Joaquin drainage. Spawning has not been observed but based upon morphology and timing of juvenile captures, it is believed that spawning may occur between May and August (Wang, 1986). In-channel and excavation activities will be conducted outside the months of May through August in areas where they are known to be present.

Sacramento splittail *(Pogonichthys macrolepidotus)*
Habitat associations and areas that should be surveyed and/or avoided include the lower Sacramento and San Joaquin rivers. They appear to spawn in shallow freshwater areas with submerged vegetation from January through July (Wang, 1986). In-channel and excavation activities will be conducted outside the months of January through July in areas where they are known to be present.

Invertebrates:

Valley elderberry longhorn beetle *(Desmocerus californicus dimorphus)*
Habitat associations and areas that should be surveyed and/or avoided are elderberry plants *(Sambucus mexicana)* in riparian habitats, although any elderberry plant with one or more stems measuring 1 inch or greater in diameter at ground level and found below 3000 feet in elevation, are considered sensitive.

Before maintenance activities begin, all elderberry plants will be clearly marked with flagging to ensure recognition and prevent accidental disturbance. If there are elderberry bushes in close proximity to the maintenance area with stems greater than or equal to 1 inch, a qualified biologist will be on site to evaluate all maintenance activities. Disturbed areas around an elderberry plant will be restored to pre-maintenance conditions to the greatest extent possible. No insecticides,

herbicides, fertilizers, or other chemicals that may potentially harm the beetle will be used on or around the elderberry plants. Mowing of grasses and ground cover may occur from July through April to reduce fire hazard, but no mowing or vegetation removal should occur within 5 feet of any elderberry plant.

Moestan blister beetle (Lytta moesta)
Molestan blister beetle (Lytta molesta)
Lytta sp. belong to the Meloid (blister beetle) family. Its elongate and slender shape characterizes this family, along with a pronotum that is narrower than either the head or the elytra, and by thread or bead-like antennae (Borror et al., 1989). The Molestan blister beetle is further characterized by the following: a pale frontal spot that is nearly always more than half as wide as the frontal area between the eyes; an emarginate (notched) sixth abdominal sternum; a pronotum that is hexagonal in shape and one-fifth to one-fourth wider than long; and moderately curved tarsal claws. Adults range between 11-22 mm in length, are black in color, have light brown wings, a silvery pubescence on underside of thorax, and an orange or reddish-orange pronotum. The pronotum has been documented as completely black in some specimens collected near Merced, although this is thought to be rare (Selander, 1960).

Habitat associations and areas that will be surveyed and/or avoided include annual grassland, foothill woodland, and atriplex scrub. The moestan and molestan blister beetle are known to occur in the Central Valley of California from Contra Costa county south to Kern and Tulare Counties (Selander, 1960). Known periods of *Lytta* adult activity range from between 1 and ten months out of the year (North American average is 3.5 months). The majority of *Lytta* species have an adult activity period occurring during mid to late summer and have been collected between April 3 and July 1 (Selander, 1960). Adult *Lytta* are more active during the day, and are not attracted to light at night.

Plants:

Mariposa pussypaws *(Calyptridium pulchellum)*
This is an annual herb that occurs in sandy soils of foothill woodlands (CalFlora, 2002). It blooms May through August (Munz, 1959). Prior to maintenance activities, surveys will be conducted to determine the presence of Mariposa pussypaws. If Mariposa pussypaws is found within the project site, the FWS will be consulted

Delta button-celery *(Eryngyum racemosum)*
This is confined to heavy clay loam soils in seasonally moist habitats such as floodplains in mixed riparian forests, and along stream courses in valley grassland communities. It blooms August through October (Munz, 1959). Prior to maintenance activities, surveys will be conducted to determine the presence of delta button-celery. If delta button-celery is found within the project site, the DFG will be consulted.

Hartweg's golden sunburst *(Pseudobahia bahiifolia)*
This is an annual herb that is found in the sandy soils of valley grassland and foothill woodland communities (CalFlora, 2002). It blooms March through May (Munz, 1959). Prior to

maintenance activities, surveys will be conducted to determine the presence of Hartweg's golden sunburst. If Hartweg's golden sunburst is found within the project site, the FWS and the DFG will be consulted.

Heartscale *(Atriplex cordulata)*
This is found on saline or alkaline soils in the lower Sacramento Valley and in the western portion of the San Joaquin Valley. It blooms May through October (Munz, 1959). Prior to maintenance activities, surveys will be conducted to determine the presence of heartscale. Any heartscale found in the project area will be given a flagged perimeter and avoided.

Brittlescale *(Atriplex depressa)*
This is associated with shadscale scrub, valley grassland, and alkali sink plant communities (CalFlora, 2000). It blooms June through October (Munz, 1959). Prior to maintenance activities, surveys will be conducted to determine the presence of brittlescale. Any brittlescale found in the project area will be given a flagged perimeter and avoided.

San Joaquin saltbush *(Atriplex joaquiniana)*
This is an annual herb that is found in alkaline soil on alkaline substrate in meadow and seep habitats in shadscale scrub, valley grassland plant communities (CalFlora, 2002). It blooms April through September (Munz, 1959). Prior to maintenance activities, surveys will be conducted to determine the presence of San Joaquin saltbush. Any San Joaquin saltbush found in the project area will be given a flagged perimeter and avoided.

Lesser saltscale *(Atriplex minuscule)*
This is an annual herb that is found on sandy alkaline soil on alkaline substrate in playa habitats of shadscale scrub, valley grassland, and alkali sink plant communities (CalFlora, 2002). It blooms June through October (Munz, 1959). Prior to maintenance activities, surveys will be conducted to determine the presence of lesser saltscale. Any lesser saltscale found in the project area will be given a flagged perimeter and avoided.

Big tarplant *(Blepharizonia plumosa ssp. Plumose)*
This is an annual herb that is found in valley grassland communities (CalFlora, 2002). It blooms July through October (Munz, 1959). Prior to maintenance activities, surveys will be conducted to determine the presence of big tarplant. Any big tarplant found in the project area will be given a flagged perimeter and avoided.

Hoover's calycadenia *(Calycadenia hooveri)*
This is an annual herb that occurs in rocky soils of valley grassland and foothill woodland communities (CalFlora, 2002). Prior to maintenance activities, surveys will be conducted to determine the presence of Hoover's calycadenia. Any Hoover's calycadenia found in the project area will be given a flagged perimeter and avoided.

Slough thistle *(Cirsium crassicaule)*
This is an annual or perennial herb that occurs in riparian and freshwater-marsh habitats of shadscale scrub, freshwater wetland, and riparian scrub plant communities (CalFlora, 2002). It blooms April through August (Munz, 1959). Prior to maintenance activities, surveys will be

conducted to determine the presence of slough thistle. Any slough thistle found in the project area will be given a flagged perimeter and avoided.

Flaming trumpet *(Collomia rawsoniana)*
This is a perennial herb found in riparian habitats of yellow pine forest and riparian forest plant communities (CalFlora, 2002). It blooms July through August (Munz, 1959). Prior to maintenance activities, surveys will be conducted to determine the presence of flaming trumpet. Any flaming trumpet found in the project area will be given a flagged perimeter and avoided.

Hispid bird's-beak *(Cordylanthus mollis ssp. hispidus)*
This is found on alkaline meadows and playas in the San Joaquin Valley and Delta. It blooms June through July (Munz, 1959). Prior to maintenance activities, surveys will be conducted to determine the presence of hispid bird's-beak. Any hispid bird's-beak found in the project area will be given a flagged perimeter and avoided.

Diamond-petaled California poppy *(Eschscholzia rhombipetala)*
This is an annual herb found in clay soils of valley grassland plant communities (CalFlora, 2002). It blooms March through June (Munz, 1959). Prior to maintenance activities, surveys will be conducted to determine the presence of diamond-petaled California poppy. Any diamond-petaled California poppy found in the project area will be given a flagged perimeter and avoided.

Madera linanthus *(Linanthus serrulatus)*
This is an annual herb found in foothill woodland and yellow pine forest plant communities (CalFlora, 2002). It blooms April through May (Munz, 1959). Prior to maintenance activities, surveys will be conducted to determine the presence of Madera linanthus. Any Madera linanthus found in the project area will be given a flagged perimeter and avoided.

Merced monardella *(Monardella leucocephala)*
This is an annual herb occurring in sandy soils of valley grassland plant communities (CalFlora, 2002). It blooms June through July (Munz, 1959). Prior to maintenance activities, surveys will be conducted to determine the presence of Merced monardella. Any Merced monardella found in the project area will be given a flagged perimeter and avoided.

Sanford's arrowhead *(Sagittaria sanfordii)*
This is an emergent, perennial aquatic herb found in freshwater marshes. It blooms May through June (Munz, 1959). Prior to maintenance activities, surveys will be conducted to determine the presence of Sanford's arrowhead. Any Sanford's arrowhead found in the project area will be given a flagged perimeter and avoided.

HAZARDS:

Substances:

Hazardous substances used within the project area may include petroleum fuel, paint and chlorine bleach. The California Department of Fish and Game will be consulted should any spill of hazardous substances occur.

Petroleum fuel
Fuel is used to power equipment including: pumps, welders and weed trimmers. Fuel will always be transported in approved containers. Funnels or self-contained spouts will be used during fuel dispensation to avoid spills. Equipment and fuel containers will be kept out of stream channels and placed on a stable surface to avoid falling into the waterway. All equipment will be properly maintained to ensure proper working order and to reduce the chance of fuel and/or oil spills and leaks.

Paint
The can, house and walkway are regularly painted to reduce corrosion and to cover-up evidence of vandalism. A bridge may also be marked/re-marked by painting small calibrations along the rail or bridge surface. The paint may be latex or rust-inhibiting enamel. All paint containers and equipment will be removed from the site daily, and upon completion of the work. Containers and equipment will be cleaned off-site. Spilling and overspray will be reduced to the maximum extent practicable.

Chlorine bleach
The can and house interior is subject mold, mildew and rodent infestation. To maintain cleanliness and prevent potential health hazards, the inside is regularly cleaned with chlorine bleach. This is conducted with a hand sprayer containing a dilute solution of bleach and water. Excessive material may be scrubbed with a brush or scraped. Rags are used to wipe the interior and contain excess material. The interior may be rinsed with water and will be mopped up with rags. The rags and all equipment will be removed from the site daily and upon completion of the work. The spilling of bleach solution and contact with the water column will be reduced to the maximum extent practicable.

Fire:

Maintenance work is often conducted during the summer in areas where dry vegetation exists. Potential fire hazards, presented by vehicle exhaust systems, fuel powered equipment, and by grinding and welding activities will be reduced by the following measures: A minimum 10 foot radius of dry vegetation will be removed around any power equipment, grinding or welding operation. All fuel powered equipment will be fitted with appropriate spark arrestors and vehicles will be parked on maintained roads or over areas where vegetation has been cleared. At least two personnel will be present during grinding or welding operations and will be trained in appropriate safety/fire-response measures. The following equipment will be on-hand during all grinding and welding operations: two 5-gallon buckets (filled with water), two McCleod/fire rakes, two shovels and an adequate and certified working fire extinguisher.

PUBLIC SERVICES:

Should a project activity result in increased fire hazard, assistance from a fire protection agency may be necessary. To minimize the likelihood of this occurring, all DWR stream gage personnel will be familiar with Fire Hazards Responsibilities, Prevention, and Control (DWR, 2002) and will have the tools and knowledge necessary to comply with State of California laws and procedures concerning fire prevention and control. By implementing prevention and control measures, potential impacts to fire protection public services will be reduced to less than significant levels.

APPENDIX A: SPECIAL STATUS PLANTS AND ANIMALS

Acronyms:

FEDERAL
ESU=Evolutionarily Significant Unit
FE=Endangered
FT=Threatened
(FSC)=Special Concern

STATE
SE=Endangered
ST=Threatened
CSC=Special Concern
FP=Department of Fish and Game Fully Protected
1A, 1B=California Native Plant Society
1A-Presumed extinct
1B-Rare, threatened, or endangered

Mammals		**Status**
Vulpes macrotis mutica	San Joaquin kit fox	ST,FE
Antrozous pallidus	Pallid bat	CSC
Corynorhinus townsendii townsendii	Townsend's western big-eared bat	CSC, (FSC)
Myotis yumanensis	Yuma myotis	(FSC)
Eumops perotis	Western mastiff bat	CSC, (FSC)
Sylvilagus bachmani riparius	Riparian brush rabbit	SE,FE
Dipodomys heermanni dixoni	Merced kangaroo rat	(FSC)
Perognathus inornatus inornatus	San Joaquin pocket mouse	(FSC)
Neotoma fuscipes riparia	Riparian woodrat	CSC, FE
Birds		
Pelecanus erythrorhynchos	American White Pelican	CSC
Accipiter cooperi	Cooper's Hawk	CSC
Buteo swainsoni	Swainson's Hawk	ST
Circus cyaneus	Northern Harrier	CSC
Elanus leucurus	White-tailed Kite	FP
Haliaeetus leucocephalus	Bald Eagle	SE,FT
Falco mexicanus	Prairie Falcon	CSC
Falco peregrinus anatum	American Peregrine Falcon	SE
Grus canadensis tabida	Greater Sandhill Crane	ST
Coccyzus americanus occidentalis	Western Yellow-billed Cuckoo	SE
Athene cunicularia	Burrowing Owl	CSC, (FSC)
Eremophila alpestris actia	California Horned Lark	CSC
Icteria virens	Yellow-breasted Chat	CSC
Agelaius tricolor	Tricolored Blackbird	CSC, (FSC)
Amphibians		
Rana aurora aurora	California red-legged frog	CSC, FT
Rana boylii	Foothill yellow-legged frog	CSC, (FSC)

Reptiles		**Status**
Clemmys marmorata	Western pond turtle	CSC, (FSC)
Anniella pulchra pulchra	Silvery legless lizard	CSC, (FSC)
Masticophis lateralis euryxanthus	San Joaquin whipsnake	ST, FT
Thamnophis gigas	Giant garter snake	ST, FT
Fish		
Lampetra hubbsi	Kern brook lamprey	CSC, (FSC)
Acipenser medirostris	Green sturgeon	CSC, (FSC)
Oncorhynchus mykiss	Steelhead - Central Valley ESU	FT
Oncorhynchus mykiss	Steelhead summer-run	CSC, FC
Oncorhynchus tshawytscha	Chinook salmon-winter-run	SE, FE
Oncorhynchus tshawytscha	Chinook salmon-spring-run	ST, FT
Oncorhynchus tshawytscha	Chinook salmon-fall/late fall-run	CSC, FC
Oncorhynchus tshawytscha	Chinook salmon-fall-run	FT
Lavinia symmetricus spp.1	San Joaquin roach	CSC
Mylopharodon conocephalus	Hardhead	CSC
Pogonichthys macrolepidotus	Sacramento splittail	CSC, FT
Invertebrates		
Tetrix sierrana	Sierra pygmy grasshopper	(FSC)
Desmocerus californicus dimorphus	Valley elderberry longhorn beetle	FT
Lytta moesta	Moestan blister beetle	(FSC)
Lytta molesta	Molestan blister beetle	(FSC)
Plants		
Calyptridium pulchellum	Mariposa pussypaws	FT
Eryngyum racemosum	Delta button-celery	SE
Pseudobahia bahiifolia	Hartweg’s golden sunburst	SE,FE
Atriplex cordulata	Heartscale	1B
Atriplex depressa	Brittlescale	1B
Atriplex joaquiniana	San Joaquin saltbush	1B
Atriplex minuscula	Lesser saltscale	1B
Blepharizonia plumosa ssp. plumosa	Big tarplant	1B
Calycadenia hooveri	Hoover's calycadenia	1B
Cirsium crassicaule	Slough thistle	1B
Collomia rawsoniana	Flaming trumpet	1B
Cordylanthus mollis ssp. hispidus	Hispid bird's-beak	1B
Eschscholzia rhombipetala	Diamond-petaled California poppy	1B
Linanthus serrulatus	Madera linanthus	1B
Monardella leucocephala	Merced monardella	1A
Sagittaria sanfordii	Sanford's arrowhead	1B

APPENDIX B: CONTACT LIST

Steve Dawson
Water Resource
Engineering Associate (Specialist)
California Department of Water Resources
Floodway Protection
1416 9th St.
Sacramento, CA 95814
(916) 653-9898
sdawson@water.ca.gov

Brian Erlandsen
Environmental Scientist
Central Valley Regional Water Quality
Control Board
3614 East Ashlan Avenue
Fresno, CA 93726
(559) 445-6071
ErlandsenB@rb5f.swrcb.ca.gov

Matt Hirkala
Regulatory Specialist
U.S. Army Corps of Engineers
1325 J Street
Sacramento, CA 95814
(916) 557-5263
mhirkala@spk.usace.army.mil

Deean Jones
Environmental Scientist
California Department of Water Resources
Environmental Compliance Planning and
Analysis Branch
1416 9th St.
Sacramento, CA 95814
(916) 574-0373
ddjones@water.ca.gov

Clarence Mayott
Senior Environmental Scientist
California Department of Fish and Game
1234 E. Shaw Avenue
Fresno, CA 93710
(559) 243-4017
cmayott@dfg.ca.gov

Jo Turner
Senior Environmental Scientist
California Department of Water Resources
Environmental Compliance Planning and
Analysis Branch
1416 9th St.
Sacramento, CA 95814
(916) 574-2739
jturner@water.ca.gov

APPENDIX C: PERMITS REQUIRED

Department of Fish and Game:	Stream or Lake Alteration Agreement (1601)
Department of Water Resources:	Right of Way
Reclamation Board:	Encroachment Permit
Regional Water Quality Control Board:	401 Certification
U.S. Army Corps of Engineers:	Section 404, Nationwide Permit(s)
City/County/Landowner:	Land Use/Access Agreement

APPENDIX D: LITERATURE CITED

Borror, D. J., C. A. Triplehorn, and N. F. Johnson, 1989. An introduction to the study of insects. Harcourt Brace and Company, Orlando, FL.

California Department of Fish and Game. 1988. California's Wildlife: Amphibians and Reptiles. The Resources Agency, Sacramento, CA.

California Department of Fish and Game. 1990. California's Wildlife: Birds. The Resources Agency, Sacramento, CA.

California Department of Water Resources. 2002. Fire Hazards; Responsibilities, Prevention, and Control. Environmental Services Section staff compilation, Fresno, CA.

Hickman, James C., 1993. The Jepson Manual; Higher Plants of California, University of California Press, CA.

Holland, R.F., 1986. Preliminary Descriptions of the Terrestrial Natural Communities of California. California Department of Fish and Game, Sacramento, CA.

Munz, P.A., D.D. Keck, 1959. A California Flora, University of California Press, CA.

Selander, R.B., 1960. Bionomics, systematics, and phylogeny of Lytta, a genus of blister beetles (Coleoptera, Meloidae). University of Illinois Press, Urbana, Illinois.

United States Department of Agriculture-Soil Conservation Service (now Natural Resources Conservation Service). July 1948. Soil Survey: The Newman Area California. Series 1938, no. 11. United States Government Printing Office, Washington, D.C.

United States Department of Agriculture-Soil Conservation Service (now Natural Resources Conservation Service). July 1962. Soil Survey: Merced Area California. Series 1950, no. 7. United States Government Printing Office, Washington, D.C.

United States Department of Agriculture-Soil Conservation Service (now Natural Resources Conservation Service). September 1964. Soil Survey: Eastern Stanislaus area California. Series 1957, no. 20. United States Government Printing Office, Washington, D.C.

United States Department of Agriculture-Soil Conservation Service (now Natural Resources Conservation Service). March 1991. Soil Survey: Madera Area California. Series 1950, no. 7. United States Government Printing Office, Washington, D.C.

U.S. Fish and Wildlife Service. 1997. Guidance on site assessment and field surveys for California red-legged frogs. USFWS, Sacramento, CA. Unpublished Report.

U.S. Fish and Wildlife Service. 1999. Standard Recommendations for Protection of the San Joaquin Kit Fox Prior to or During Ground Disturbance. USFWS, Sacramento, CA. Unpublished Report.

U.S. Fish and Wildlife Service. 1999b. Draft Recovery Plan for the Giant Garter Snake (*Thamnophis gigas*). USFWS, Portland, OR.

Wang, J. C. S. 1986. Fishes of the Sacramento-San Joaquin Estuary and Adjacent Waters, California: A Guide to the Early Life Histories. Interagency Ecological Study Program for the Sacramento-San Joaquin Estuary. Technical Report 9 (FS/B10-4ATR 86-9).